PulmoneticSystems®

Innovations For Life

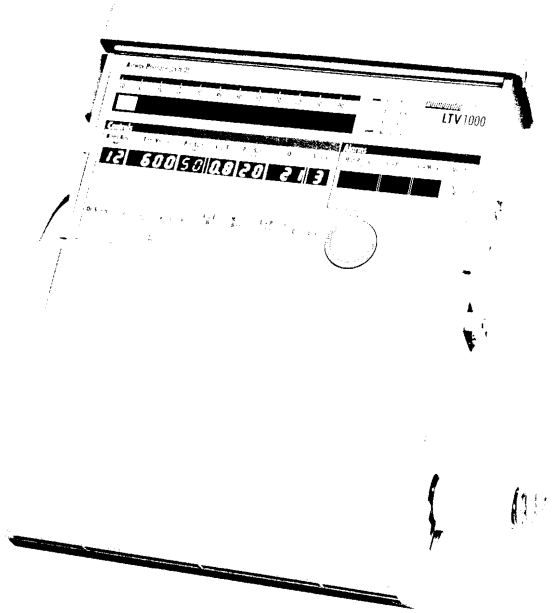

LTV® Series Ventilator

Service Manual

P/N 10665 Rev. G

September 2003

Revision History

Revision Level	Revision Date
Rev. A, ECO 539	May 1999
Rev. B, ECO 740	January 2000
Rev. C, ECO 818	August 2000
Rev. D, ECO 1149	May 2001
Rev. E, ECO 1532	May 2002
Rev. F, ECO 1983	April 2003
Rev. G, ECO 2374	September 2003

Contact Information

Pulmonetic Systems, Inc.

17400 Medina Rd., Suite 100

Minneapolis, Minnesota 55447-1341

Phone: (763) 398-8500

Office Fax: (763) 398-8400

Customer Care Center Phone: (800) 754-1914, ext. 2

Customer Care Center Fax: (763) 398-8403

Sales/Marketing E-mail: info@pulmonetic.com

Customer Care Center E-mail: service@pulmonetic.com

Pulmonetic Systems Website: http://www.pulmonetic.com

LTV® 1000, LTV® 950, LTV® 900, LTV® 800 and LTV® are trademarks belonging to Pulmonetic Systems, Inc.

Copyright © 1997, 1998, 1999, 2000, 2001, 2002, 2003 Pulmonetic Systems, Inc., Minneapolis, Minnesota.

User/Owner Responsibility

This manual is intended for use by Pulmonetic Systems trained and authorized service personnel only. Pulmonetic Systems does not condone or approve of service activity on its products by untrained and unauthorized personnel. **Pulmonetic Systems is not responsible for any unauthorized repairs or any repairs made by unauthorized procedures.**

Use of an incorrect part or failure to exercise due care in the installation, removal, servicing, checkout or calibration of parts and equipment may result in damage or malfunction of the equipment. This may also result in damage to property and injury including death.

The purchaser and installer of these parts shall bear full responsibility and liability for the above. All maintenance performed within the applicable warranty period must be authorized in advance by Pulmonetic Systems service representative in order to retain the warranty status of the subject unit.

Warranty

Pulmonetic Systems warrants that the LTV© Series Ventilator is free from defects in material and workmanship for a period of one (1) year from the date of shipment, or 8,800 hours as measured on the usage meter, whichever comes first, with the following limitations:

- Patient circuit components, including tubes, exhalation manifold, and other associated parts are warranted for sixty (60) days from date of shipment.
- The Internal Battery is warranted for ninety (90) days from date of shipment.

Pulmonetic Systems will, at its option, either repair, replace, or issue credit for products that prove to be defective during the warranty period.

For warranty service or repair, the product must be returned to Pulmonetic Systems or a service facility designated by Pulmonetic Systems, shipping prepaid by the Buyer.

LIMITATION OF WARRANTY

Ordinary maintenance, as specified in the LTV© Series or LTV© 800 Ventilator Operator's and Service Manuals, is not covered under the forgoing warranty

The forgoing warranty does not apply to defects resulting from:

1) Improper or inadequate maintenance of the unit;
2) Improper use or misuse of the unit;
3) Unauthorized modifications or repair to the unit;
4) Use of the unit with unauthorized accessories, e.g. external battery or AC adapter.
5) Operation of the unit outside the specified environment.

NO IMPLIED WARRANTIES

This warranty is exclusive. There are no other warranties expressed or implied.

LIMITATION OF LIABILITY

Pulmonetic Systems shall not be liable for loss of profits, loss of use consequential damages, or any other claim based on breach of warranty. Pulmonetic Systems, Inc.'s liability for damages of any kind shall be limited to the purchase price of the defective unit.

Notices

The LTV® Series Ventilator complies with limitations as specified in IEC 601-1-2 for Medical Products. It does however, use and radiate radio frequency energy.

The function of this machine may be adversely affected by the operation of other nearby equipment, such as high frequency surgical diathermy equipment, short-wave therapy equipment, defibrillators or MRI equipment.

Notice To Users

Unsafe Operation - Servicing the LTV® Series Ventilator without a complete and thorough understanding of its attributes may result in unsafe operating conditions. It is important that this manual be read and understood in its entirety before servicing the ventilator.

Warnings and Cautions Section - Read the section on **Warnings** and **Cautions** carefully before attempting to service or operate the LTV® Series Ventilators.

Use and Maintenance - Any questions regarding installing, setting up, operating, or maintaining the LTV® Series Ventilators, should be directed to a certified Pulmonetic Systems service technician or Pulmonetic Systems, Inc.

Table of Contents

Chapter 1 - Introduction 1-1

Getting Assistance 1-1
Operator's Safety Information 1-2
Warnings 1-3
Cautions 1-5
Symbols 1-7

Chapter 2 - Ventilator Checkout Tests 2-1

Alarm Test 2-4
Display Test 2-5
Control Test 2-7
Leak Test 2-9
Vent Inop Alarm Test 2-11
Exit 2-13

Chapter 3 - Real Time Transducer Data 3-1

Chapter 4 - Cleaning and Sterilization 4-1

Cleaning the Ventilator 4-1
Cleaning the Exhalation Valve and Reusable Patient Circuit 4-2
Cleaning the Inlet Filter 4-7
Cleaning the Fan Filter 4-8

Chapter 5 - Preventative Maintenance 5-1

Recommended Maintenance Schedule 5-1
Before Initial Use 5-2
Before Connecting to Patient 5-2
Storage Maintenance 5-2
Daily Maintenance 5-3
750 Hour / Monthly Maintenance 5-3
10,000 Hour / 2 Year Maintenance 5-4
30,000 Hour Maintenance 5-4

Chapter 6 - Maintenance & Calibration 6-1

Operating Theory 6-1
Pneumatic Schematic Detail 6-3
Vent Maintenance 6-4
Vent Maintenance Entry 6-5
Vent Maintenance Entry Alarm 6-5
Calibration 6-6
Airway Pressure Calibration 6-7
Flow Differential Calibration 6-9
Valve Differential Calibration 6-13
O_2 Inlet Pressure Calibration 6-16
Motor Drive Calibration 6-18
Vent Maintenance Exit 6-20
Calibration Worksheet 6-21
Flow Valve Calibration 6-22
Flow Valve Calibration Worksheet 6-26
Servo 6-27
Solenoid 6-29
Step Test 6-30

Watchdog Test 6-3
Configuration 6-3
Model Selection 6-3
Flow Valve Home Position 6-3
Temperature Compensation 6-3
Analog Board Setting 6-3
Configuration Menu Exit 6-3
Clear EEPROM 6-3
Vent Maintenance Menu Exit 6-4

Chapter 7 - Troubleshooting 7-1

Displays and Buttons 7-2
Ventilator Performance 7-6
Advanced Vte Diagnostic Procedures 7-22
Advanced FiO_2 Diagnostic Procedures 7-26
Power and Battery Operation 7-28
Alarms 7-31
Checkout Test Failures 7-37
Test Lung Operation 7-41

Chapter 8 - Component Removal and Replacement 8-1

Training and Authorization 8-1
Service Record 8-1
Tools 8-2
Calling for Assistance 8-2
Before Removing the Back Panel 8-3
Before Replacing the Back Panel 8-3
After Performing Any Maintenance 8-3
Boots, Protective 8-4
  Boots, Temporary Removal 8-5
  Boots, Permanent Removal 8-7
  Boots, Reinstallation 8-10
  Boots, Installation 8-13
LTM/ LTV® Mounting Bracket 8-16
  LTM/LTV® Mounting Bracket, Temporary Removal 8-17
  LTM/LTV® Mounting Bracket, Permanent Removal 8-18
  LTM/LTV® Mounting Bracket, Reinstallation 8-19
  LTM/LTV® Mounting Bracket, Installation 8-21
Back Panel 8-23
  Back Panel, Removal 8-23
  Dovetail Mounting Bracket, Replacement 8-24
  Back Panel, Reinstallation 8-27
Internal Flexible Tube Routing Configurations 8-31
  LTV® 900, 950 and 1000 Current Version Tube Routing Diagrams 8-32
  LTV® 900, 950 and 1000 Earlier Version Tube Routing Diagrams 8-33
  LTV® 800 Current and Earlier Tube Routing Diagram 8-34
Alarm Sounder Assembly 8-35
Analog Board Assembly 8-38
External Inlet Filter 8-41
Fan Assembly 8-42
  Cleaning the Fan Filter 8-44
Flow Valve Assembly 8-45
Front Panel 8-51
Internal Battery Pack 8-55
Internal Inlet Filter 8-58
Main Board Assembly 8-59

Memory Board 8-63
Motor Board Assembly 8-65
O_2 Blender Assembly / O_2 Inlet Block 8-67
O_2 Blender Filter 8-72
Power Board Assembly 8-73
Power Board Fuse 8-85
Right and Left Soft Side Panels 8-87
Rotary Knob Assembly 8-88
Solenoid Manifold Assembly 8-90
Thermo Conductive Motor Board Heatsink Pad 8-93
Thermo Conductive Turbine Pad 8-94
Turbine Manifold 8-95

Chapter 9 - Final Checkout Test 9-1

Checkout Test Selection 9-1
General Checkout 9-2
General Checkout Worksheet 9-7
Power Checkout 9-11
Power Checkout Worksheet 9-13
Performance Checkout 9-15
Performance Checkout Worksheet 9-22
Oxygen Checkout 9-27
Oxygen Checkout Worksheet 9-29
24 Hour Burn-in 9-30
24 Hour Burn-in Worksheet 9-31

Appendix A - Ventilator Specifications A-1

Appendix B - Glossary B-1

Appendix C - Service Record Form C-1

Appendix D - Event Trace D-1

Event Codes D-3
Event Codes by Code # D-3
Event Codes by Event Name D-5
Event Trace Data Definitions D-7

Appendix E - Reference Information E-1

Conversion Factors E-1
Extended Features Map E-2
Extended Features Map (continued) E-3
External Accessories Screw Location, Type and Length E-4
Input O_2 Flow Chart E-6
Parts, Replacement E-7
Settings, Dip Switch E-11
Settings, Front Panel Controls and Extended Features E-12
Tools, Required E-13
Transducer Calibration, Acceptable A/D Counts E-14
Torque Values E-15

Appendix F - Index F-1

Chapter 1 - INTRODUCTION

This manual describes how to perform routine maintenance, troubleshooting, and repairs on the LTV® Series Ventilator. It is designed for use by Pulmonetic Systems trained and authorized service personnel. **Do not perform any of the procedures in this manual unless you are trained and authorized for service on the LTV® Series Ventilators.**

This manual contains what you need to know to:

1) Perform preventative maintenance.
2) Calibrate the ventilator.
3) Perform routine troubleshooting.
4) Remove and replace major components of the ventilator.

See the *LTV® Series* or *LTV® 800 Ventilator Operator's Manual* for more information on setting up and operating the ventilator.

Getting Assistance

If a problem occurs while maintaining the LTV® Series Ventilator or if you require additional information, contact a certified Pulmonetic Systems service technician or Pulmonetic Systems, Inc. at:

Pulmonetic Systems, Inc.

17400 Medina Rd., Suite 100
Minneapolis, Minnesota 55447-1341

Phone:	(763) 398-8500
Office Fax:	(763) 398-8400
Customer Care Center Phone:	(800) 754-1914, ext. 2
Customer Care Center Fax:	(763) 398-8403
Sales/Marketing E-mail:	info@pulmonetic.com
Customer Care Center E-mail:	service@pulmonetic.com
Pulmonetic Systems Website:	http://www.pulmonetic.com

Operator's Safety Information

All Operators are to read and understand the following information about Warning, Caution and Note statements before operating the LTV® Series Ventilator.

WARNING !

"**Warning**" statements contain information about circumstances or practices that may cause serious and undesirable results, or expose the patient or operator to danger.

Caution !

"**Caution**" statements contain information about circumstances or practices that may result in equipment damage.

Note

"**Note**" statements contain additional information to assist in the proper operation of the LTV® Series Ventilators.

Warnings

WARNING !

Ventilator Service and Repair - All servicing or repair of the LTV© Series Ventilator must be performed only by a certified Pulmonetic Systems service technician.

Fire or Explosion - Operation of the LTV® Series Ventilators in the presence of flammable gases could cause a fire or explosion. Under no circumstances is the ventilator to be operated when explosive gases are present. The presence of nitrous oxide or flammable anesthetics presents a danger to the patient and operator.

Untrained Personnel – Only properly trained personnel should operate the ventilator. The LTV® Series Ventilator is a restricted medical device designed for use by Respiratory Therapists or other properly trained and qualified personnel under the direction of a physician and in accordance with applicable state laws and regulations.

Unauthorized Parts or Accessories – Serious harm to the patient may result from the use of unauthorized parts or accessories. Only items expressly approved by Pulmonetic Systems may be used in conjunction with the LTV® Series Ventilators.

Ventilator Checkout Tests – Be aware that gas is not delivered to the patient during these tests. Disconnect the patient from the ventilator and ventilate the patient using an alternative method before running the Ventilator Checkout tests.

Ventilator Checkout and Maintenance Modes - The LTV® Series Ventilator does not deliver gas during the Ventilator Checkout mode (**VENT CHECK**) or Ventilator Maintenance mode (**VENT MTNCE**) and should not be used to ventilate a patient during these tests.

Mounting Screw Use – Internal damage to the ventilator may result if the wrong length mounting screws are used.

Accessories Mounting Screws - Refer to the information contained in Pulmonetic Systems Replacement Screws Kit, P/N 11149, to determine the appropriate accessories mounting screws or accessories replacement screws location, type and length to use when removing or exchanging external accessories on an LTV® Series Ventilator.

Patient Circuits – Pulmonetic Systems Patient Circuits, Exhalation Valve Assemblies and Water Traps are shipped clean, not sterile.

Ultra Violet Light Sensitivity – The material used in the tubing of the "Reusable" Patient Circuits is not UV stable. Avoid exposure of tubing to UV light.

PEEP Valve Rotation – Attempting to adjust the PEEP valve counterclockwise past zero (0) may damage the PEEP valve assembly or cause circuit leaks.

Specific Boot Replacement Screw Location - One leg of the Upper Protective Boot has an additional screw hole (furthest from the end of the leg);

- On earlier version ventilators (screw was located in the upper hole in the leg of the boot) the use of a 3/16" mounting screw is required.
- On current version ventilators (screw was located in the lower hole in the leg of the boot) the use of a 1/4" mounting screw is required.

WARNING !

Specific Boot Installation Screw Location - One leg of the Upper Protective Boot has an additional screw hole (furthest from the end of the leg);

- On earlier version ventilators, the screw hole will align with the upper hole in the boot and requires the use of the 1/4" mounting screw.
- On current version ventilators, the screw hole will align with the lower hole in the boo and requires the use of the 5/16" mounting screw.

Specific Bracket Replacement Screw Location – One leg of the LTM/ LTV® Mounting Bracket has a circular notch just above the elongated screw slot;

- On earlier version ventilators (screw was positioned in the upper half of the Mounting Bracket leg screw slot) the use of a 3/16" mounting screw is required.
- On current version ventilators (screw was positioned in the lower half of the Mounting Bracket leg screw slot) the use of a 1/4" mounting screw is required.

Specific Bracket Installation Screw Location - One leg of the LTM/ LTV® Mounting Bracket has a circular notch just above the elongated screw slot;

- On earlier version ventilators, the screw hole behind this slot will align in the upper half of the slot (nearest the circular notch) and requires the use of a 5/16" mounting screw.
- On current version ventilators, the screw hole behind this slot will align in the lower half of the slot (furthest from the circular notch) and requires the use of a 3/8" mounting screw.

Cautions

Caution !

Electrical Grounding – In the event of a loss of electrical protective ground, touching the ventilator could result in electrical shock. To ensure grounding and avoid this danger, use only the unmodified power cord originally supplied with the LTV® Series Ventilators, maintained in good condition and connected to a properly wired and grounded electrical power outlet.

Fuse Fire Hazard – Replacement of existing fuses with fuses with different voltage or electrical current ratings may cause a fire.

Storage Temperature - Storing the LTV® Series Ventilator at temperatures above 60°C (140°F) for long periods can damage the Internal Battery and cause expected battery duration to degrade.

Patient Assist Call Connector – Do not apply more than 25V rms or 32VDC to the Patient Assist Call connector.

Calibration Tool and Ventilator Damage - To avoid damaging the ventilator, turn the ventilator off and disconnect the AC Adapter before attaching the calibration tool.

CLEAR Function Cautions - The **CLEAR** function should be used with great care as once a section of the memory is cleared, all data in that section of memory is lost and it cannot be automatically restored.

Electronic and Mechanical Parts - The LTV® Series Ventilator contains delicate electronic and mechanical parts that must be handled properly to avoid damage. Follow the instructions carefully and make sure to observe all instructions.

Opening the Ventilator - Always turn the ventilator **OFF** and remove the external power before opening the ventilator case or attempting to service the ventilator.

Anti-static Precautions - Always wear a grounded anti-static wrist strap when handling the ventilator with the case open. Electrostatic discharge can damage the internal electronics.

Verification of Operation - After opening the ventilator and performing any maintenance, verify proper operation of the ventilator by performing the checks and calibrations recommended in *Chapter 9 - Final Checkout Test.*

Recalibration of the Flow Valve - When recalibrating the Flow Valve;

- This procedure must be followed completely, and in the listed order of events.
- Calibration of the Valve Differential (see page 6-13) and Motor Drive (see page 6-18) must be performed prior to performing Flow Valve calibration.

Ventilator Sterilization – To avoid irreparable damage to the LTV® Series Ventilator, do not attempt to sterilize it.

Cleaning Agents – To avoid damaging the ventilator's plastic components and Front Panel, do not use cleaning agents containing ammonium chloride, other chloride compounds, more than 2% glutaraldehyde, phenols, or abrasive cleaners.

Caution !

Ventilator Immersion - Do not immerse the ventilator in liquids.

Differential Pressure Ports - A low-pressure air nozzle with flow less than 10 liters per minute should be used for cleaning the differential pressure ports.

Exhalation Valve Cleaning - Do not pour or spray liquid cleaners into the exhalation valve.

Patient Wye Installation – After cleaning, install the patient wye in the patient circuit so the proximal sense lines are oriented up while operating.

Care of the Exhalation Valve - The exhalation valve is a delicate assembly and may be damaged if;

- Care is not exercised when handling or cleaning it.
- Cleaning instruments or foreign bodies are inserted into it.
- High-pressure gas nozzles are used to dry it.

Front Panel Cleaning – Do not pour or spray liquid cleaners onto the Front Panel.

Care of Bacterial Filters – If bacterial filters are used in conjunction with the LTV® Series Ventilator, comply with all cleaning procedures as specified by the filter manufacturer.

Wet or Damp Filters - Do not install a wet or damp filter into the LTV® Series Ventilators. This could damage the ventilator.

Proximal Sense Lines - Do not remove the proximal sense lines from the patient wye.

Damage to the Analog Board – Irreparable damage can occur to the Analog Board for use on LTV® 1000 model ventilators during this procedure. Use care not to puncture the wall of the transducer when scoring the tip of the Oxygen Pressure Transducer.

Software Caution – Never install a version of software lower than the version originally installed in the ventilator. Erroneous operation may result from the installation of an incompatible software version. Generally, LTV® ventilator software is designed to be backwards-compatible with this exception.

Reusable Patient Circuit Components - To avoid degradation of the reusable patient circuit components, do not exceed the following constraints:

- 50 cleaning cycles or 1 year (whichever comes first)

Steam Autoclave:

- Pressure: 20 PSIG
- Temperature: 275°F (135°C)
- Time: 6 minutes

Liquid Sterilizing Agent:

- The use of liquid agents containing more than 2% glutaraldehyde.

Pasteurization:

- A 30-minute warm water detergent and a 30-minute 165°F (74°C) hot water cycle.
- Drying in a sterile drier for more than 1 hour or 140°F (59°C).

Gas (ETO):

- Temperature: 131°F (55°C)

Symbols

Symbol	Compliance[1]	Title	Application
	ISO 3864 (Prev. IEC 348) Symbol No. B.3.1	Caution (refer to accompanying documents)	Used to direct the user to the instruc manual where it is necessary to follo certain specified instructions where s is involved.
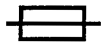	IEC 417 Symbol No. 417-IEC-5016	Fuse	To indicate the fuse boxes, for exam and their location.
	IEC 417 Symbol No. 417-IEC-5035	Output	To identify an output terminal when it necessary to distinguish between inp and outputs.
	IEC 417 Symbol No. 417-IEC-5019	Protective earth (ground)	To identify any terminal which is inter for connection to an external protecti conductor for protection against elec shock in case of a fault or the termina protective earth (ground) electrode.
	IEC 417 Symbol No. 417-IEC-5333	Type BF equipment.	To mark a type BF equipment compl with IEC Publication 601.
	IEC 417 Symbol No. 417-IEC-5031	Direct Current	To indicate on the rating plate that th equipment is suitable for direct curre only; to identify relevant terminals.
	IEC 417 Symbol No. 417-IEC-5032	Alternating current	To indicate on the rating plate that th equipment is suitable for alternating current only; to identify relevant term
	IEC 417 Symbol No. 417-IEC-5172	Class II equipment	To identify equipment meeting safety requirements specified for Class II equipment.
	IEC 60417 Symbol No. 5182	Sound; audio	Used to identify controls or terminals related to audio signals.

[1] Reference IEC Medical Electrical Equipment, 2nd Edition 1988

Chapter 2 - VENTILATOR CHECKOUT TESTS

This chapter details five test procedures that are initiated through the Vent Check menu and used to verify the proper operation of the LTV® Series Ventilator. These Checkout Tests are to be performed before using the ventilator on a patient and in accordance with recommended periodic maintenance and testing of the ventilator. See *Chapter 5 - Preventative Maintenance.*

The five test procedures are:

Test	Test used to:
Alarm Test	Used to verify that the audible alarm is working correctly.
Display Test	Used to verify that the ventilator displays are working correctly.
Control Test	Used to verify that the ventilator buttons and the Set Value knob are working correctly.
Leak Test	Used to test the patient circuit for leaks.
Vent Inop Alarm Test	Used to verify that the Inop Alarm is working correctly.

The Vent Check Menu is set up as follows:

VENT CHECK
- **ALARM**
- **DISPLAY**
- **CONTROL**
- **LEAK**
- **EXIT**

WARNING !

Ventilator Checkout and Maintenance Modes - The LTV® Series Ventilator does not deliver gas during the Ventilator Checkout mode (**VENT CHECK**) or Ventilator Maintenance mode (**VENT MTNCE**) and should not be used to ventilate a patient during these tests.

To enable the Ventilator Checkout menu, a special power on sequence is required.

To enable the Ventilator Checkout menu:

1) Disconnect the patient from the ventilator and ventilate the patient using an alternative method of ventilation.
2) Begin with the ventilator off.
3) Connect the AC Adapter to the ventilator and a valid AC power source and verify that the External Power and Charge Status LEDs are illuminated.
4) Press and hold down the Select button. While continuing to hold the Select button down, turn the ventilator on by pressing the On/Standby button.
   - **REMOVE PTNT** is displayed; otherwise, steps 2 through 4 must be repeated.
   - An audible alarm (alternating on/off tone) will sound while **REMOVE PTNT** is displayed.

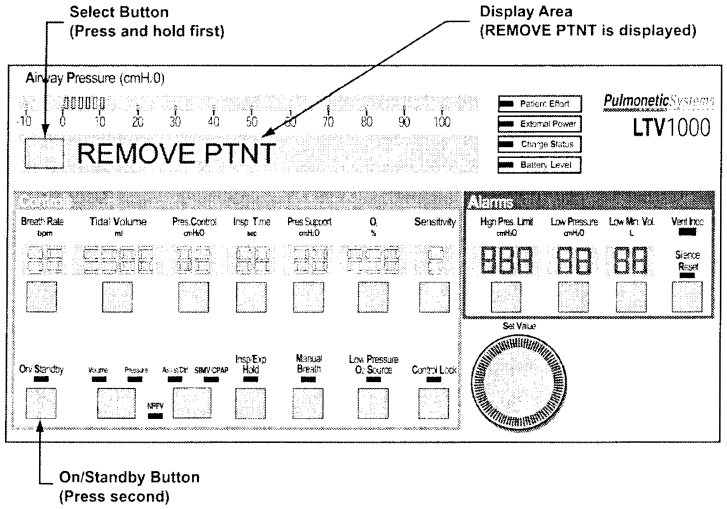

5) Clear the alarm by pressing the Silence/Reset button.
   - The audible alarm will silence, and the display will change from **REMOVE PTNT** to **VENT CHECK**.

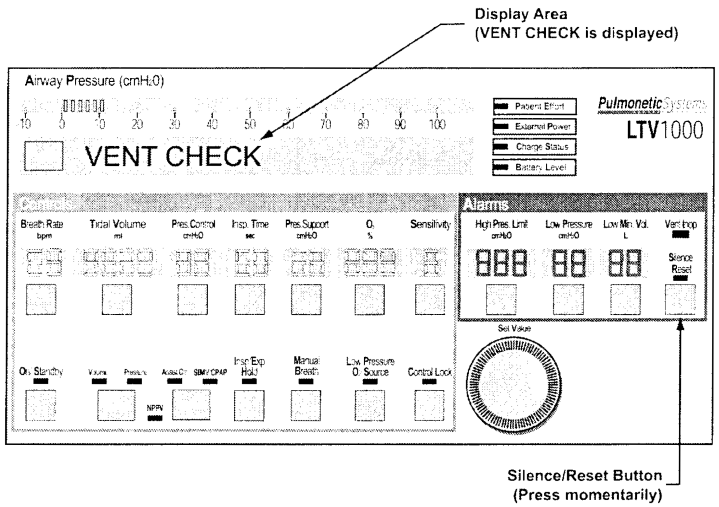

To enter the Ventilator Checkout menu:

1) Push the Select button.
2) The first Ventilator Checkout Test, **ALARM** is displayed.

Alarm Test

The Alarm Test is used to verify that the audible alarm is working correctly.

To run the Alarm Test:

1) Press the Select button while **ALARM** is displayed.
2) Verify that the audible alarm is sounded.
3) When the alarm has sounded for at least 2 seconds, push the Select button again.
   - The audible alarm is silenced and the next menu item is displayed.
4) For ventilators with Power Board P/N 15000 installed (as indicated by an audio sound symbol (♪) on the Back Panel label), verify a confirming audible chirp occurs after the alarm is silenced.

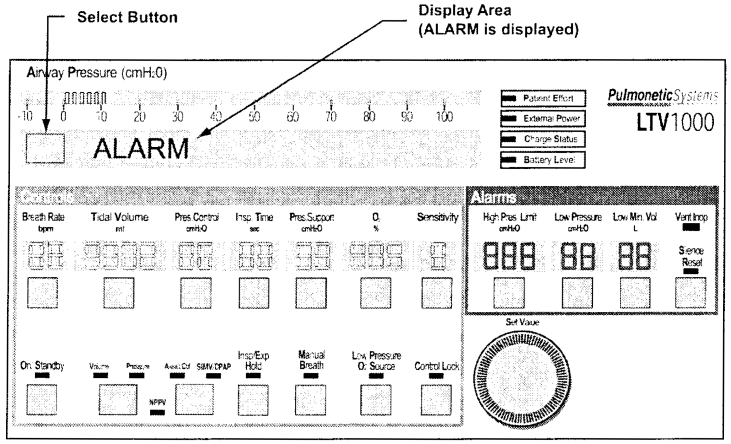

If the ventilator fails the Alarm Test, see *Chapter 7 - Troubleshooting* for more information.

Display Test

The Display Test is used to verify that the ventilator displays are working correctly.

To run the Display Test:

1) Press the Select button while **DISPLAY** is displayed.
2) All segments of the 7-segment control displays; all dots of the dot-matrix window displays and all LEDs are illuminated.
   - Although the LTV® 1000 Front Panel is shown below, the test is applicable to al LTV® Series Ventilators.
3) To end the display test, press the Select button again and the next menu item is displayed.

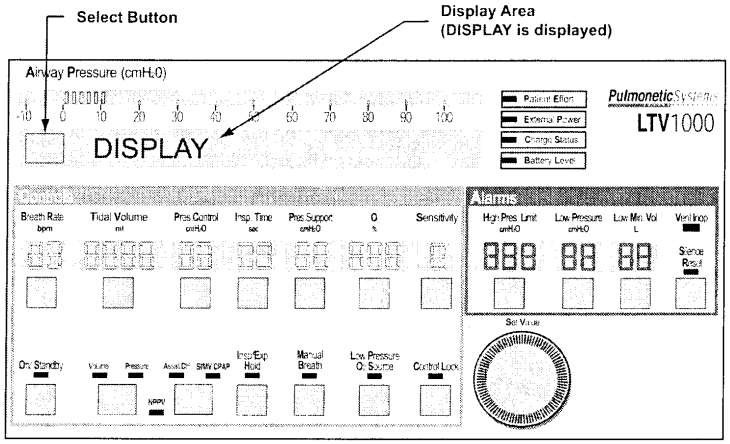

Note

The display states for the **External Power**, **Vent Inop**, and **Charge Status** LEDs are not tested by the Display Test.

- The **External Power** and **Charge Status** LEDs are tested and verified when the AC adapter is connected to the ventilator (see page 2-2).
- The **Vent Inop** LED is tested and verified during the Vent Inop Alarm Test (see page 2-2).

Displays will be illuminated in the following colors:

Display	Color
Airway Pressure Display	Green
Display Window	Red
Breath Rate	Green
Tidal Volume	Green
Pressure Control[2]	Green
Inspiratory Time	Green
Pressure Support	Green
O_2 %[3]	Green
Sensitivity	Green
High Pressure Limit Alarm	Red
Low Pressure Alarm	Red
Low Minute Volume Alarm	Red
On/Standby LED	Green
Volume Mode LED[3]	Green

Display	Color
Pressure Mode LED[2]	Green
Assist/Control Mode LED	Green
SIMV/CPAP Mode LED	Green
NPPV Mode LED	Green
Inspiratory / Expiratory Hold LED[3]	Green
Manual Breath LED	Green
Low Pressure O_2 Source LED[3]	Green
Control Lock LED	Green
Patient Effort LED	Green
External Power LED	Not tested
Charge Status LED	Not tested
Battery Level LED	Amber
Vent Inop LED	Not tested
Silence Reset LED	Red

If the ventilator fails the Display Test, see *Chapter 7 - Troubleshooting* for more information.

[2] Not applicable to the LTV® 900 or 800
[3] Applicable to the LTV® 1000 only

Control Test

The Control Test is used to verify that the ventilator buttons and the Set Values knob are working correctly.

To run the Control Test:

1) Press the Select button while **CONTROL** is displayed.

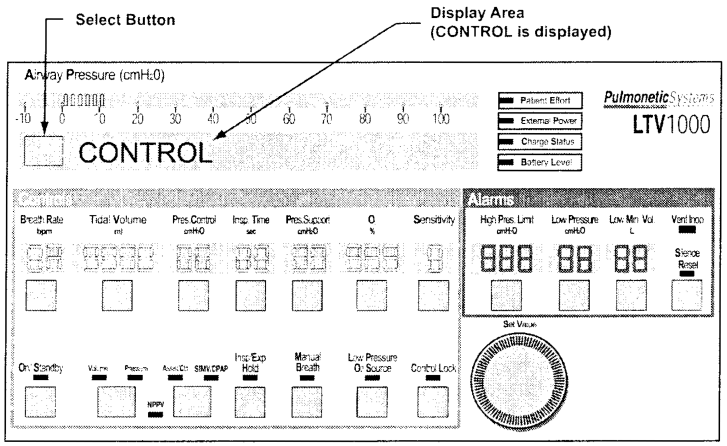

2) **SELECT** is displayed in the display window.

- Although the LTV® 1000 Front Panel is shown below, the test is applicable to all LTV® Series Ventilators.

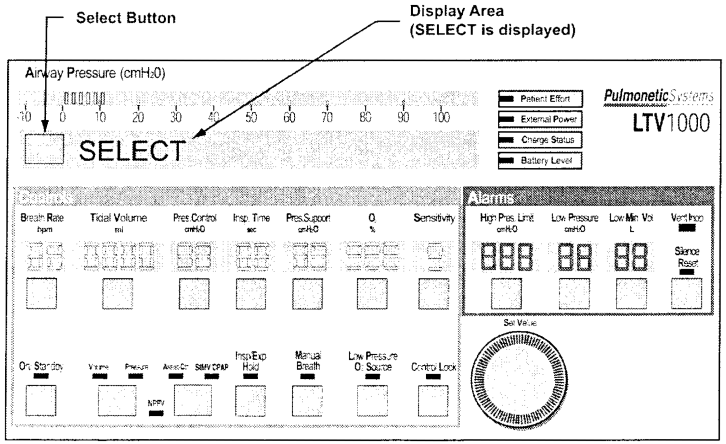

3) Test each control by pressing each button, one at a time. When pressed, verify that the name of the button pressed is displayed in the display window.
   - Control names are as shown in the table below.

Control	Display
Display Select	**SELECT**
Breath Rate	**BREATH RATE**
Tidal Volume	**TIDAL VOLUME**
Pressure Control[4]	**PRES CONTROL**
Inspiratory Time	**INSP TIME**
Pressure Support	**VOL A/C**
O_2 %[5]	**O2%**
Sensitivity	**SENSITIVITY**
High Pressure Alarm	**HIGH PRES**
Low Peak Pressure	**LOW PRES**
Low Minute Volume	**LOW VOL**
Silence / Reset	**SILENCE**
On/Standby	**ON / STNDBY**
Volume & Pressure[4]	**MODE VOL/PRS**
Assist/Control & SIMV/CPAP	**MODE A/C S/C**
Inspiratory / Expiratory Hold[5]	**IE HOLD**
Manual Breath	**MANUAL BRTH**
Low Pressure O_2 Source[5]	**LOW PRES O2**
Control Lock	**CONTROL LOCK**
Set Value Knob rotate Left	**ROTATE LEFT**
Set Value Knob rotate Right	**ROTATE RIGHT**

4) Test the Set Value knob by turning it clockwise and counterclockwise. Verify that the direction of rotation is displayed in the display window.

5) To exit the control test, press the Select button again and the next menu item is displayed.

If the ventilator fails the Control Test, see *Chapter 7 - Troubleshooting* for more information.

---

[4] Not applicable to the LTV® 800 and 900

[5] Not applicable to the LTV® 800, 900 or 950

Leak Test

The Leak Test is used to test the patient circuit for leaks.

To run the Leak Test:

1) Attach all patient circuit accessories (such as water traps, heated circuits and humidifiers to the patient circuit.
2) Connect the patient circuit to the LTV® Series Ventilator.
3) With a clean, gloved hand or 4"X4" gauze pad, occlude the proximal end of the patient circuit.
4) Press the Select button while **LEAK** is displayed.

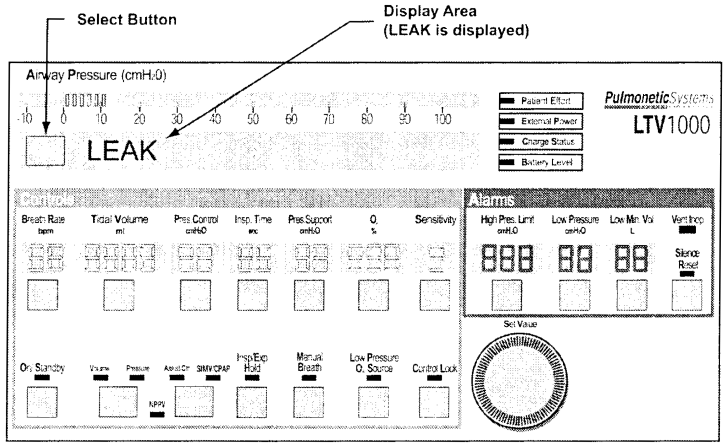

Note

The Leak Test cannot be run until the ventilator has been running for 60 seconds. If you attempt to run the leak test before the warm-up period has completed, a **WAITING** message will be displayed. When the warm-up period is complete, the Leak Test menu item is redisplayed.

5) To perform the Leak Test, the ventilator:
   a) Closes the exhalation valve and sets the Flow Valve to a near-closed state. The display briefly shows **HOMING VALVE**.
   b) Elevates the turbine motor speed. The display shows **SET TURBINE**.
   c) Elevates the circuit pressure. The display shows **PRES xx.x cmH_2O** where **xx.x** is the real-time airway pressure.
   d) Sets the Flow Valve to a near closed position. The display shows **FLOW xx.x Lpm** where **xx.x** is the flow through the Flow Valve.
   e) After several seconds, the display shows **LEAK xx.xx PASS** or **LEAK xx.xx FAIL** indicating the Leak Test results.
6) The Leak Test will fail if the flow through the Flow Valve is greater than 1 lpm.
7) To exit the Leak Test, press the Select button again and the next menu item is displayed.

If the ventilator fails the Leak Test, see *Chapter 7 - Troubleshooting* for more information.

Vent Inop Alarm Test

The Vent Inop Alarm Test is used to verify that the Inop Alarm is working correctly.

To run the Vent Inop Alarm Test:

1) To run the Vent Inop Alarm Test, the ventilator must be on (running) for at least 60 seconds and the Ventilator Checkout menu must be enabled.
   - When the Ventilator Checkout menu is enabled, **VENT CHECK**, **ALARM**, **DISPLAY**, **CONTROL**, **LEAK**, or **EXIT** is displayed in the ventilator display area.
2) Turn the ventilator off by pressing and holding the On/Standby button for a minimum of 3 seconds. **DO NOT** press the Silence/Reset button.

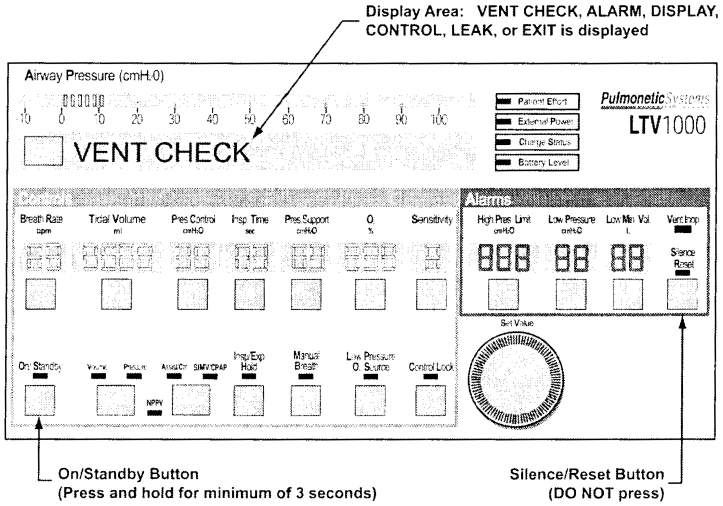

3) Observe the ventilator for 15 seconds.
   - Listen for the alarm tone
   - Watch the Vent Inop LED

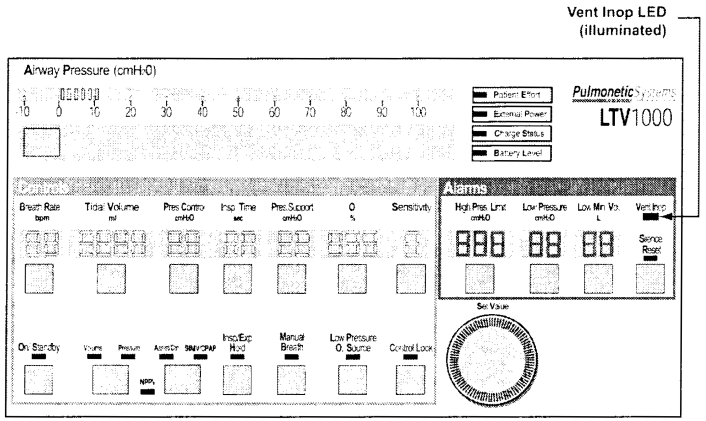

4) For all ventilators, verify that **both** of the following conditions existed;
   - The alarm tone sounded continuously for the full 15-second duration.
   - The Vent Inop LED illuminated continuously for the full 15-second duration.
5) Silence the alarm by pressing the Silence/Reset button.
6) For ventilators with Power Board P/N 15000 installed (as indicated by an audio sound symbol (♪) on the Back Panel label), verify the following condition existed;
   - A confirming audible chirp occurred after the alarm was silenced.

If the ventilator fails the Vent Inop Alarm Test, see *Chapter 7 - Troubleshooting* for more information.

Exit

To return to the top of the VENT CHECK menu:

Press the Select button while **EXIT** is displayed.

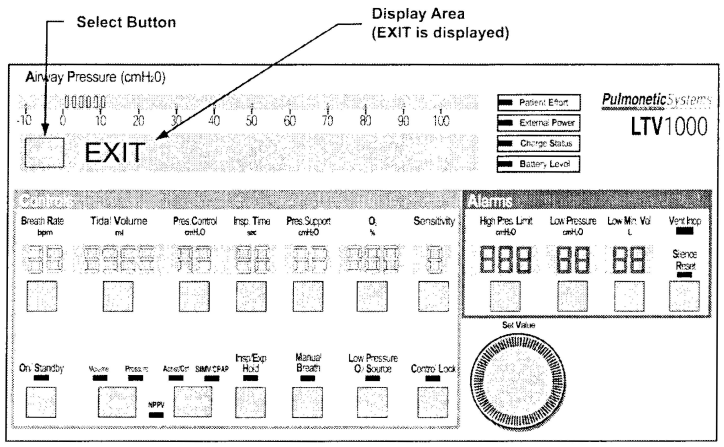

To enter normal ventilation mode:

1) Turn through the main menu entries until **EXIT** is displayed.
2) Press the Select button while **EXIT** is displayed, or press the Control Lock button until normal ventilation mode is restored.

Chapter 3 - REAL TIME TRANSDUCER DATA

The Real Time Transducer data allows you to view the real time activity in the ventilator. The real time transducer menu is set up as follows:

RT XDCR DATA

AP	**xx.xx**	**$^{c}_{m}H_2O$**	
FDb	**xx.xx**	**$^{c}_{m}H_2O$**	(Not on LTV® 800)
FDw	**xx.xx**	**$^{c}_{m}H_2O$**	(Not on LTV® 800)
FDn	**xx.xx**	**$^{c}_{m}H_2O$**	(Not on LTV® 800)
FTw or **FTn**	**xx.xx**	**Lpm**	(Not on LTV® 800)
FTb	**x.xx**	**Lpm**	(Not on LTV® 800)
LEAK	**xx.xx**	**Lpm**	(Not on LTV® 800)
FVd	**xx.xx**	**$^{c}_{m}H_2O$**	
FV	**xx.xx**	**Lpm**	
STEP	**xxxx**		
TS	**xxxx**	**rpm**	
O2	**xx.xx**	**PSIG**	(LTV® 1000 only)
BV	**xx.xx**	**VOLTS**	
EV	**xx.xx**	**VOLTS**	
RT EXIT			

Each item displays real time activity in the displayed units. For some items, transducer counts can also be displayed. Pressing Select while the item is displayed, displays additional transducer data.

Display	Real Time Data
AP xx.xx $^{c}_{m}H_2O$	Airway pressure as measured at the patient wye using the high side proximal sense line.
FDb xx.xx $^{c}_{m}H_2O$ (Not on LTV® 800)	Flow differential pressure as measured at the patient wye using the bi-directional transducer. Differential pressure is measured between the high and low side proximal sense lines.
FDw xx.xx $^{c}_{m}H_2O$ (Not on LTV® 800)	Flow differential pressure as measured at the patient wye using the wide scale transducer. Differential pressure is measured between the high and low side proximal sense lines.

Display	Real Time Data
FDn xx.xx $^{c}_{m}H_2O$ (Not on LTV® 800)	Flow differential pressure as measured at the patient wye using the narrow scale transducer. Differential pressure is measured between the high and low side proximal sense lines. The narrow scale transducer is only used for differential pressures between -0.35 cmH_2O and 0.35 cmH_2O (approximately -15 lpm to 15 lpm).
FTw xx.xx Lpm or **FTn xx.xx Lpm** (Not on LTV® 800)	Flow in lpm calculated from the differential pressure measured at the patient wye. When the value is calculated using the wide scale differential pressure, **FTw** is displayed. When the value is calculated using the narrow scale differential pressure, **FTn** is displayed. When Leak Compensation is on, **FTw xx.xx** and **FTn xx.xx** lpm values are offset by the value of **LEAK xx.xx** lpm. Transducer count display is not available for this item.
FTb x.xx Lpm (Not on LTV® 800)	Flow in lpm calculated from the differential pressure measured at the patient wye using the bi-directional transducer. Transducer count display is not available for this item.
LEAK xx.xx Lpm (Not on LTV® 800)	Leak flow calculated from the differential pressure transducer, measured at the patient wye during exhalation.
FVd xx.xx $^{c}_{m}H_2O$	Differential pressure as measured across the Flow Valve.
FV xx.xx Lpm	Flow valve flow in lpm calculated from the differential pressure measured across the Flow Valve. Transducer count display is not available for this item.
STEP xxxx	Commanded Flow Valve motor step position. Transducer count display is not available for this item.
TS xxxx rpm	Monitored turbine speed in rpms.
O2 xx.xx PSIG (LTV® 1000 only)	Oxygen inlet pressure in PSIG as measured at the inlet pressure transducer.
BV xx.xx VOLTS	Internal battery voltage.
EV xx.xx VOLTS	External power voltage.

Chapter 4 - CLEANING AND STERILIZATION

Cleaning the Ventilator

All ventilator external surfaces should be cleaned before and after each patient use, and as may be required.

To clean the ventilator:

1) Wipe the exterior surfaces of the ventilator with a clean, damp cloth. The use of an anti-bacterial cleaning solution is recommended. Be sure to wipe away any residual cleaner.

Caution!

Ventilator Sterilization – To avoid irreparable damage to the LTV® Series Ventilator, dc not attempt to sterilize it.

Cleaning Agents – To avoid damaging the ventilator's plastic components and Front Panel, do not use cleaning agents containing ammonium chloride, other chloride compounds, more than 2% glutaraldehyde, phenols, or abrasive cleaners.

Ventilator Immersion - Do not immerse the ventilator in liquids.

Exhalation Valve Cleaning - Do not pour or spray liquid cleaners into the exhalation valve.

Front Panel Cleaning – Do not pour or spray liquid cleaners onto the Front Panel.

Cleaning the Exhalation Valve and Reusable Patient Circuit

WARNING !

Patient Circuits – Pulmonetic Systems Patient Circuits, Exhalation Valve Assemblies and Water Traps are shipped clean, not sterile.

Ultra Violet Light Sensitivity – The material used in the tubing of the "Reusable" Patient Circuits is not UV stable. Avoid exposure of tubing to UV light.

PEEP Valve Rotation – Attempting to adjust the PEEP valve counterclockwise past zero (0) may damage the PEEP valve assembly or cause circuit leaks.

Caution !

Proximal Sense Lines - Do not remove the proximal sense lines from the patient wye.

Care of the Exhalation Valve - The exhalation valve is a delicate assembly and may be damaged if;

- Care is not exercised when handling or cleaning it.
- Cleaning instruments or foreign bodies are inserted into it.
- High-pressure gas nozzles are used to dry it.

Care of Bacterial Filters – If bacterial filters are used in conjunction with the LTV® Serie Ventilator, comply with all cleaning procedures as specified by the filter manufacturer.

To clean the exhalation valve, wye, sense line(s) and reusable patient circuit:

For purposes of cleaning, the patient circuit with exhalation valve and all accessories must be detached from the ventilator.

1) Disassemble the exhalation valve as shown (on following pages) and remove the diaphragm and compression spring. If using a patient circuit with a PEEP valve; remove the exhalation valve retainer collar (rotate) and pull the PEEP valve assembly off the exhalation valve body. **USE CAUTION:** The diaphragm and spring may become dislodged.
2) Remove exhalation valve diaphragm and compression spring.

LTV® 900, 950 and 1000 Patient Circuits:

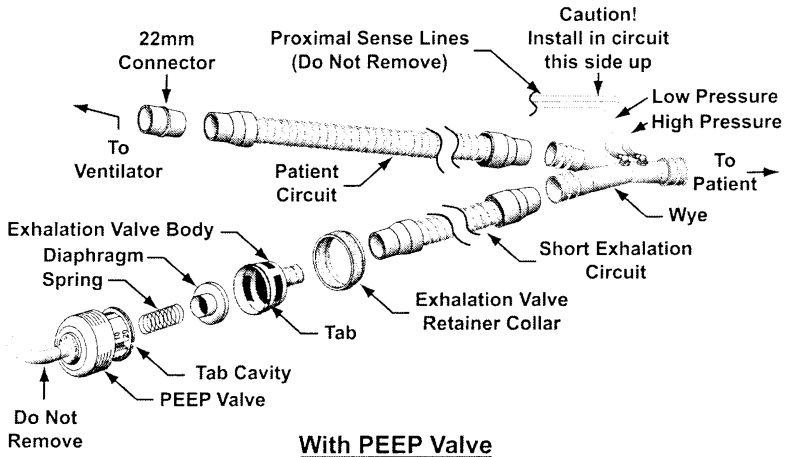

With PEEP Valve

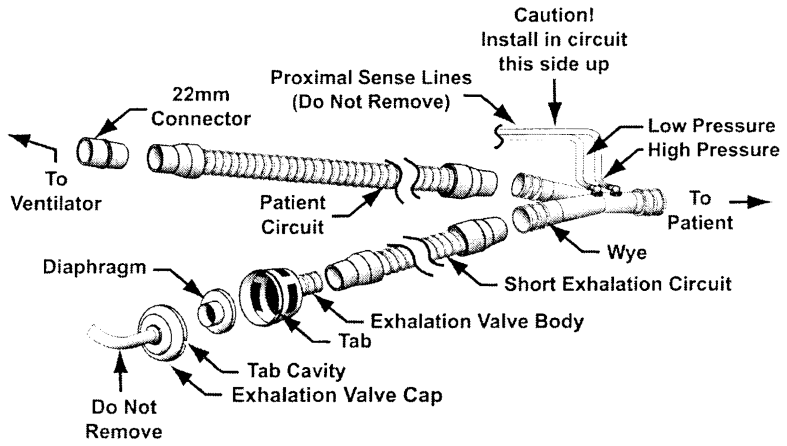

PEEPLess Valve Cap

LTV® 800 Patient Circuits:

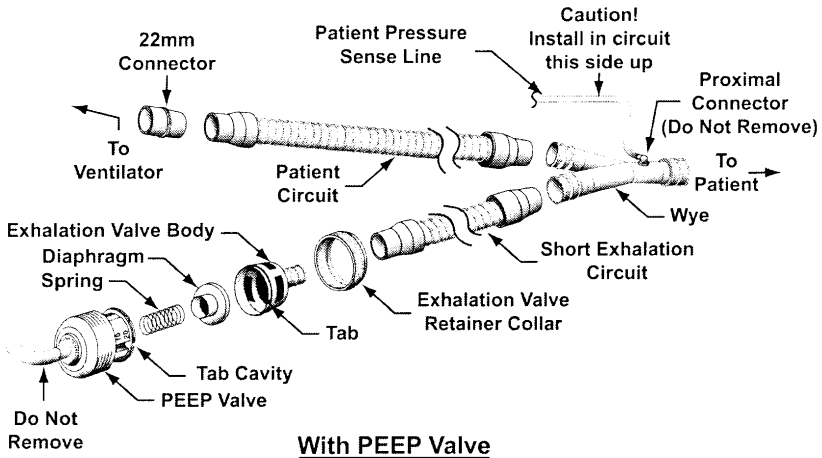

With PEEP Valve

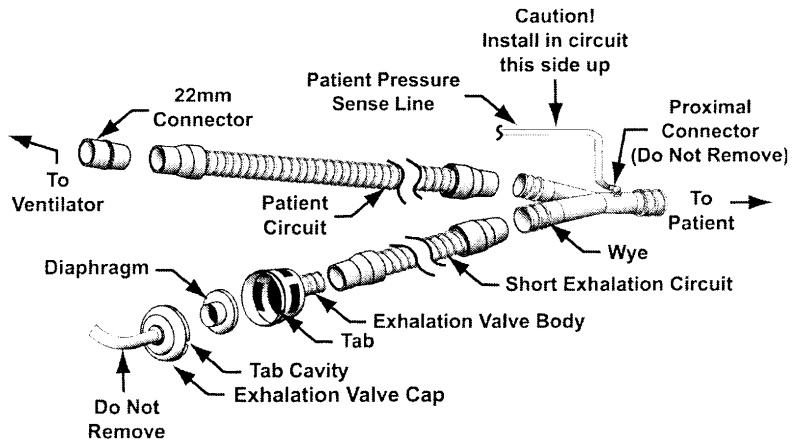

PEEPLess Valve Cap

3) **To clean the exhalation valve and patient circuit**, remove all gross particulate matter and bathe for a minimum of 10 minutes in 50% water and 50% vinegar, KlenZyme, or another enzymatic cleaner warmed to 95°F to 150°F (35°C to 65.5°C). Rinse gently for 2 minutes and use a low flow air source to eliminate any residual fluid or debris. Ultrasonic cleaning is not recommended.

4) **High Level Disinfecting:** Remove all gross particulate matter and bathe in a glutaraldehyde solution (e.g., Cidex (2%)) for 20 minutes. Rinse gently for 2 minutes. Use a low flow air source to eliminate any residual fluid.

5) Exhalation Valves, Patient Circuits and Water Traps are shipped clean, not sterile. **Sterilization** of the exhalation valve, reusable patient circuit and water trap should follow individual institution processes or guidelines.

Caution !

Reusable Patient Circuit Components - To avoid degradation of the reusable patient circuit components, do not exceed the following constraints:

- 50 cleaning cycles or 1 year (whichever comes first)

Steam Autoclave:

- Pressure: 20 PSIG
- Temperature: 275°F (135°C)
- Time: 6 minutes

Liquid Sterilizing Agent:

- The use of liquid agents containing more than 2% glutaraldehyde.

Pasteurization:

- A 30-minute warm water detergent and a 30-minute 165°F (74°C) hot water cycle.
- Drying in a sterile drier for more than 1 hour or 140°F (59°C).

Gas (ETO):

- Temperature: 131°F (55°C)

Care of the Exhalation Valve - The exhalation valve is a delicate assembly and may be damaged if;

- Care is not exercised when handling or cleaning it.
- Cleaning instruments or foreign bodies are inserted into it.
- High-pressure gas nozzles are used to dry it.

Differential Pressure Ports - A low-pressure air nozzle with flow less than 10 liters per minute should be used for cleaning the differential pressure ports.

6) Inspect the patient circuit, exhalation valve and all accessories. Replace any excessively worn or damaged components.

To reassemble the exhalation valve:

> ***WARNING !***
>
> **PEEP Valve Rotation** – Attempting to adjust the PEEP valve counterclockwise past zero (0) may damage the PEEP valve assembly or cause circuit leaks.

> ***Caution !***
>
> **Patient Wye Installation** – After cleaning, install the patient wye in the patient circuit so the proximal sense lines are oriented up while operating.

1) Depress the lock and set the PEEP valve to "0".
2) Insert the compression spring in the center hole of the PEEP valve. Make sure spring is securely seated inside the PEEP valve.
3) Push the diaphragm on top of the spring. Make sure the diaphragm is correctly oriented with the narrow lip fitting up inside the PEEP valve.
4) Snap the PEEP valve onto the exhalation valve body, ensuring the tab and cavity are aligned. **USE CAUTION** not to dislodge the diaphragm when snapping the exhalation body and PEEP body together.
5) Slide the Exhalation Valve Retainer Collar over the Exhalation Valve and tighten (rotate) to the PEEP Valve.

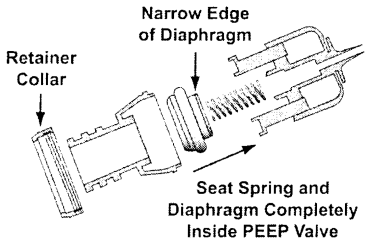

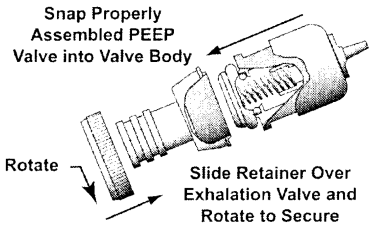

6) Replace the exhalation valve in the patient circuit. Reconnect the exhalation valve drive line and sense lines to the ports on the side of the ventilator.

Cleaning the Inlet Filter

To clean the inlet filter:

1) Remove the inlet filter by gently pinching the foam filter and pulling it out.

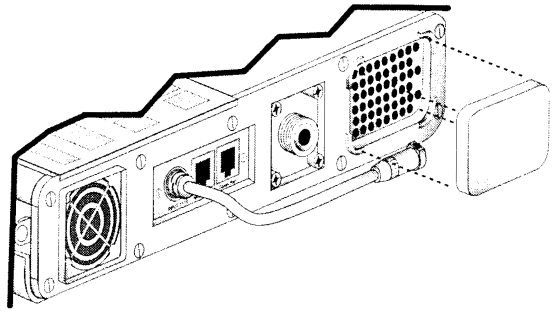

2) Hand wash the filter using warm water and a mild liquid detergent.
3) Rinse the filter thoroughly in warm water to remove all detergent.
4) Inspect the filter for damage and replace if necessary.
5) Allow the filter to air dry before replacing it into the ventilator.

Caution!

Wet or Damp Filters - Do not install a wet or damp filter into the LTV® Series Ventilators. This could damage the ventilator.

Cleaning the Fan Filter

To clean the Fan Filter:

1) Turn the ventilator off.
2) Remove the Fan Filter grill by popping it out with a small screwdriver or long nose pliers.
3) Remove the Fan Filter by gently pinching the foam filter and pulling it out.

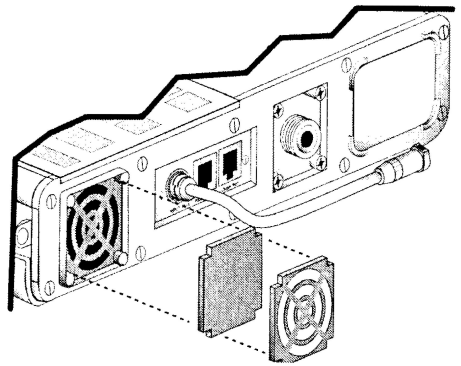

Note

If you touch the rotating fan blades while removing the Fan Filter grill or filter, a **HW FAULT** will occur. This is normal. Clear the **HW FAULT** alarm by using the Silence / Reset button.

4) Hand wash the filter using warm water and a mild liquid detergent.
5) Rinse the filter thoroughly in warm water to remove all detergent.
6) Inspect the filter for damage and replace if necessary.
7) Allow the filter to air dry before replacing it into the ventilator.
8) Replace the filter and snap the Fan Filter grill in place.

Caution !

Wet or Damp Filters - Do not install a wet or damp filter into the LTV® Series Ventilators. This could damage the ventilator.

Chapter 5 - PREVENTATIVE MAINTENANCE

The following preventative maintenance is required for proper operation of the LTV® Series Ventilator.

Recommended Maintenance Schedule

The LTV® Series Ventilator is designed to operate for extended periods of time with a minimum amount of maintenance. The following maintenance is recommended:

Hours of Service[6]	Maintenance Required
Before initial use	• Charge the Internal Battery by plugging the ventilator into an A power source for 24 hours.
Before connecting to patient	• Check the ventilator for proper operation per *Chapter 2 - Vent Checkout Tests.*
While in storage, every 2 months	• Recharge the Internal Battery by plugging the ventilator into a power source for 24 hours[7].
Daily	• Check the Inlet Filter, clean if necessary. • Check the Fan Filter, clean if necessary.
Every 750 hours or once a month	• Clean the external air inlet filter. • Clean the Fan Filter. • Check the ventilator for proper operation per *Chapter 2 - Vent Checkout Tests.*
Every 10,000 hours[8] or two years	• Calibrate the transducers. • Replace the Internal Battery pack[9]. • Replace the Motor Board. • Clean or replace the internal air inlet filter. • Clean or replace the Oxygen Blender Inlet filter.
Every 30,000 hours[8]	• Replace the Turbine Manifold assembly. • Replace the Solenoid Manifold. • Replace the Flow Valve. • Replace the Rotary Knob assembly. • Replace the O_2 Blender. • Replace the Fan assembly. • Replace all silicone tubing. • Check the thermal pads for compression and replace if neces

This is the recommended schedule for typical clinical or home settings. Some environmental conditions may require you to perform the maintenance procedures more frequently.

---

[6] To check the number of hours the ventilator has been in service, see the LTV® Series Ventilator Operator's Manual, Chapter 9 - Extended Features, Usage Meter.

[7] If the battery has been deeply discharged, it may take several charge and discharge cycles before the battery can be charged to its full capacity.

[8] 10,000 hour, two year and/or 30,000 hour Extended Maintenance and ventilator repair must be performed by a Pulmonetic Systems factory trained service technician.

[9] Replacement at 10,000 hours or 2 years is based on normal use of up to 200 full charge cycles or 400 hal charge cycles. The battery may need to be replaced more frequently if it is being charged more often. The battery should also be replaced any time it fails to reach a full charge, or if the ventilator runs for less

Before Initial Use

The Internal Battery should be fully charged prior to the initial use of the ventilator. To charge the battery, plug the ventilator into an AC power source for 24 hours. While charging in the standby mode, the Charge Status Indicator LED will display flashing amber, solid amber or solid green. If the Charge Status Indicator displays red, the Internal Battery cannot be charged and should be replaced. If the Charge Status Indicator does not display green at the end of 24 hours of charging, the Internal Battery should be replaced.

Before Connecting to Patient

To ensure the ventilator is functioning properly, the Ventilator Checkout tests are to be performed and successfully passed before connecting the ventilator to a patient.

- Run the Ventilator Checkout Alarm Test.
- Run the Ventilator Checkout Display Test.
- Run the Ventilator Checkout Control Test.
- Run the Ventilator Checkout Leak Test.
- Run the Ventilator Checkout Vent Inop Alarm Test.

To run the Ventilator Checkout tests, see *Chapter 2 - Ventilator Checkout Tests.*

Storage Maintenance

To prevent damage to the LTV® Series Ventilator Internal Battery while in storage, it must be recharged every 2 months.

To recharge the battery, plug the ventilator into an AC power source for 24 hours. While recharging in the standby mode, the Charge Status Indicator LED will display flashing amber, solid amber or solid green. If the Charge Status Indicator displays red, the Internal Battery cannot be charged and should be replaced. If the Charge Status Indicator does not display green at the end of 24 hours of charging, the Internal Battery should be replaced.

Daily Maintenance

After each day of operation, do the following:

- Check the external air filter, clean if necessary. In dusty or high humidity environments, the filter may need to be cleaned often.
- Check the Fan Filter, clean if necessary. In dusty or high humidity environments, the filter may need to be cleaned often.

750 Hour / Monthly Maintenance

After each 750 hours of operation, do the following:

- Clean or replace the external air inlet filter. In dusty or high humidity environments, the filter may need to be cleaned or replaced more often.
- Clean or replace the Fan Filter. In dusty or high humidity environments, the filter may need to be cleaned or replaced more often.
- Run the Ventilator Checkout Alarm test.
- Run the Ventilator Checkout Display test.
- Run the Ventilator Checkout Control test.
- Run the Ventilator Checkout Leak test.
- Run the Ventilator Checkout Vent Inop Alarm test.

To clean the air inlet filter, see *Chapter 4 - Cleaning and Sterilization.*

To clean the Fan Filter, see *Chapter 4 - Cleaning and Sterilization.*

To run the Ventilator Checkout Tests, see *Chapter 2 - Ventilator Checkout Tests.*

10,000 Hour / 2 Year Maintenance

After every 10,000 hours or 2 years of operation, do the following:

- Perform all items on the 750-hour maintenance list.
- Calibrate the transducers.
- Replace the Internal Battery pack[10].
- Replace the Motor Board.
- Clean or replace the interior air inlet filter.
- Clean or replace the O_2 inlet filter.

To calibrate the transducers, see *Chapter 6 - Maintenance & Calibration.*

To replace the Internal Battery pack, see *Chapter 8 - Component Removal and Replacement.*

To replace the Motor Board, see *Chapter 8 - Component Removal and Replacement.*

To clean or replace the internal air inlet filter, see *Chapter 8 - Component Removal and Replacement.*

To clean or replace the Oxygen Blender Inlet Filter, see *Chapter 8 - Component Removal and Replacement.*

30,000 Hour Maintenance

After every 30,000 hours of operation, a complete ventilator maintenance should be performed. **Unless you are trained and authorized to perform a complete ventilator maintenance, return the ventilator to Pulmonetic Systems or an authorized service center for maintenance.**

To perform a 30,000-hour maintenance, do the following:

- Perform all items on the 750 and 10,000-hour maintenance lists.
- Replace the Turbine Manifold assembly.
- Replace the Solenoid Manifold.
- Replace the Flow Valve.
- Replace the Rotary Knob assembly.
- Replace the O_2 Blender.
- Replace the Fan assembly.
- Replace all silicone tubing.
- Check the thermal pads for compression and replace if necessary.

For instructions on each of these procedures, see *Chapter 8 - Component Removal and Replacement.*

---

[10] Replacement at 10,000 hours or 2 years is based on normal use of up to 200 full charge cycles or 400 partial charge cycles. The battery may need to be replaced more frequently if it is being charged more often. The battery should also be replaced any time it fails to reach a full charge, or if the ventilator runs for less than 1 hour on a fully charged battery.

Chapter 6 - MAINTENANCE & CALIBRATION

Operating Theory

The LTV® Series Ventilator utilizes an electromechanical pneumatic system under the control of a microprocessor to deliver patient ventilation. The following diagrams and descriptions illustrate the major components of the ventilator and their respective functions.

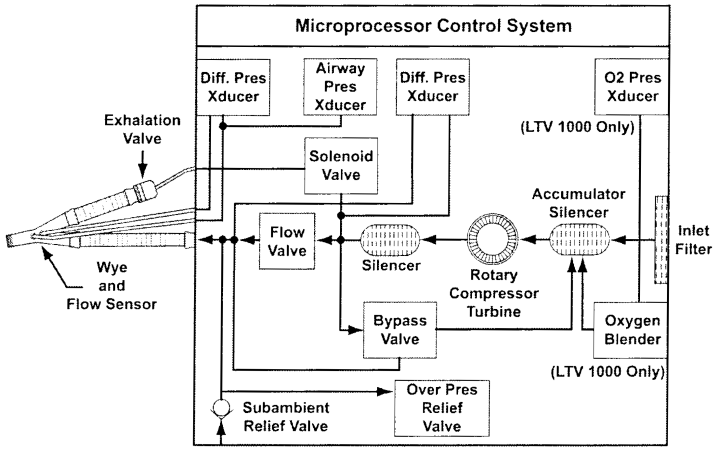

LTV 900, 950 and 1000 Pneumatic Schematic Block Diagram

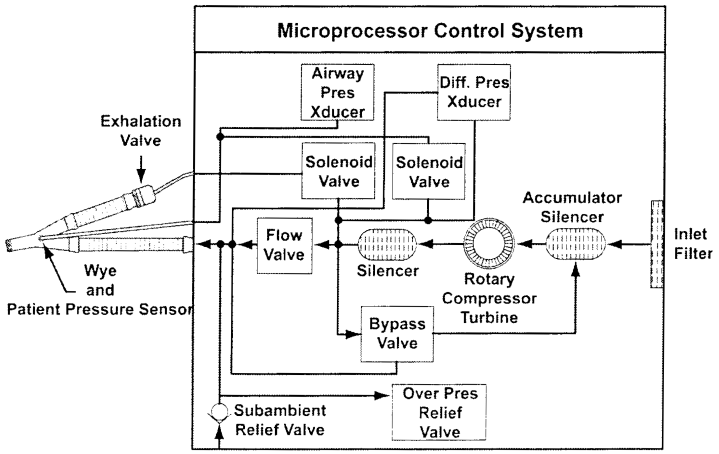

LTV 800 Pneumatic Schematic Block Diagram

Room air enters the ventilator through a flexible foam **Inlet Filter**. After exiting the filter, the air enters an **Accumulator/Silencer** where it mixes with oxygen delivered from the **Oxygen Blender**[11]. In addition, this chamber provides acoustic silencing to reduce the **Rotary Compressor** input noise. Mixed gas then enters the **Rotary Compressor Turbine,** where energy is added to the gas stream as required to meet the pressure and flow delivery requirements of the current ventilation settings.

Gas exiting the **Rotary Compressor Turbine** output port enters another **Silencer**. This chamber dampens acoustic noise from the **Rotary Compressor Turbine**. Upon exiting the silencing chamber, the gas flow splits in two paths. Gas flow for ventilation diverts to the **Flow Valve**, while excess flow is recirculated through the **Bypass Valve** to the inlet **Accumulator/Silencer**. The **Bypass Valve** maintains **Flow Valve** inlet pressure high enough above **Flow Valve** outlet pressure to ensure a positive differential pressure across the valve, yet low enough to ensure that excess energy is not wasted when operating from batteries.

Ventilation flow enters the **Flow Valve,** which controls all inspiratory gas flow to the patient. The valve is driven by a rotary actuator, and translates circular motion to a poppet position, which in turn meters flow to the patient. The valve is characterized such that gas flow is a known function of differential pressure across the valve and actuator position. A **Differential Pressure Transducer** is provided to measure the differential flow valve pressure.

Ventilation gas exiting the **Flow Valve** is connected to the **Wye and Exhalation Valve** by a patient circuit.

The **Flow Sensor**[12] at the **Wye** measures the exhaled flow using a fixed orifice type transducer. Transducer sensor ports are located between the patient and ventilator connection ports. The **Exhalation Valve** provides the following functions:

1) Closes the exhalation port during inspiration to divert gas to the patient.
2) Opens the exhalation port during exhalation to allow patient gases to be exhausted to the atmosphere.
3) Provides variable PEEP (Positive End Expiratory Pressure) during the exhalation phase.

A **Differential Pressure Transducer**[12] is provided to measure the delta pressure developed across the flow transducer. The transducer is autozeroed to ambient pressure and the sense lines are purged to prevent moisture migration into the transducer.

The **Oxygen Blender**[11] accepts pressurized oxygen from an external source and, as directed by the control system, meters the oxygen flow to meet the requirements of the current O2% setting and ventilation flow demand. The **O2 Pressure Transducer**[11] measures inlet pressure and is used by the Blender control system to compensate the oxygen delivery for variations in oxygen inlet pressure.

The **Sub-Ambient Relief Valve** allows the patient to inspire spontaneously from room air in the event of a failure of the main ventilator system. The **Over Pressure Relief Valve** provides an independent mechanical means to limit the maximum inspiratory pressure. Both of these functions are physically included in the Flow Valve Body.

The **Airway Pressure Transducer** measures pressure at the patient airway and is used for a feedback signal during the delivery of pressure breaths. The transducer is autozeroed to ambient pressure and the sense lines are purged to prevent moisture migration into the transducer.

---

[11] LTV® 1000 only.

[12] LTV® 1000

Pneumatic Schematic Detail

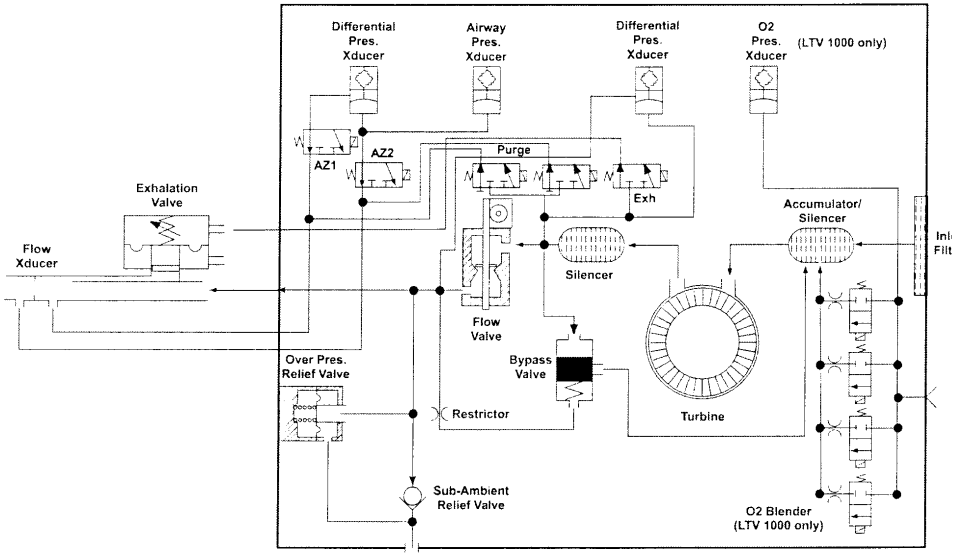

LTV 900, 950 and 1000 Pneumatic Schematic Detail

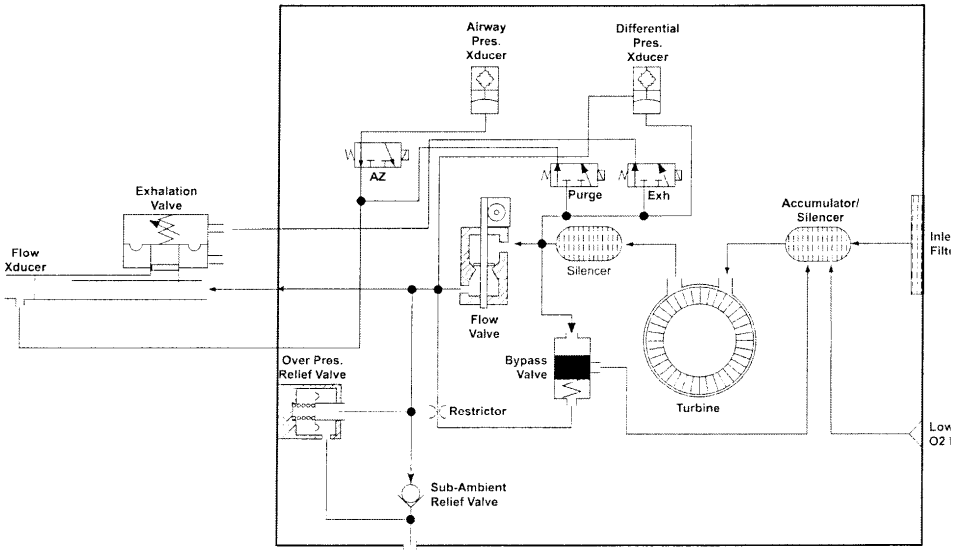

LTV 800 Pneumatic Schematic Detail

Vent Maintenance

These Ventilator Maintenance tests are used to verify the ventilator is working correctly, to troubleshoot problems with ventilator operation and performance, and to perform maintenance procedures such as calibration.

> ***Note***
>
> To ensure the advantage of all new features and reliability improvements, Pulmonetic Systems requires that the LTV® ventilator's operating software be at, or higher than, version 3.11 when performing any Maintenance and Calibration processes or Component Removal and Replacement procedures. To upgrade the ventilator's operating software, see *Chapter 8 - Component Removal and Replacement, Memory Board*, page 8-63.

The maintenance menu is set up as follows:

VENT MTNCE

- **CALIBRATION**
- **SERVO**
- **SOLENOID**
- **STEP TEST**
- **WDOG TEST**
- **CONFIG**
- **CLEAR**
- **EXIT**

Vent Maintenance Entry

> ***WARNING !***
>
> **Ventilator Checkout and Maintenance Modes -** The LTV© Series Ventilator does not deliver gas during the Ventilator Checkout mode (**VENT CHECK**) or Ventilator Maintenance mode (**VENT MTNCE**) and should not be used to ventilate a patient during these tests.

The Ventilator Maintenance menu is not enabled when the ventilator is powered up normally. **To enable the Ventilator Maintenance menu:**

1) Turn the ventilator off.
2) Remove the Back Panel of the ventilator. For instructions on how to remove the Back Panel, see *Chapter 8 - Component Removal and Replacement.*
3) Locate dip switch 5 and set it to the ON position (towards the inside of the ventilator.)
4) Turn the ventilator on.

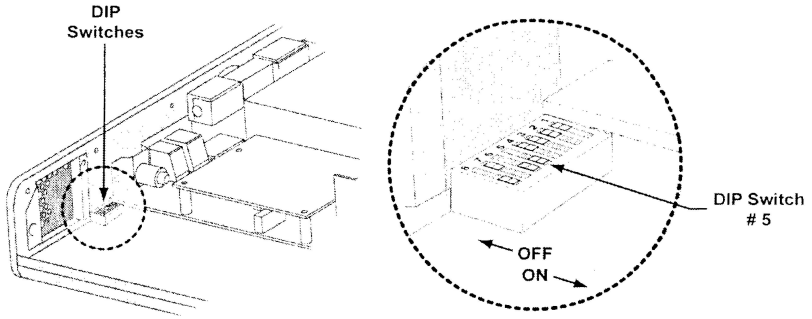

Vent Maintenance Entry Alarm

When you power the ventilator on in the Vent Maintenance mode, the **REMOVE PTNT** message is displayed and the audible alarm is sounded to remind you to remove the patient from the ventilator and use an alternative method of ventilation if you have not already done so.

To clear the REMOVE PTNT alarm:

1) Press the Silence / Reset button.
2) The first Ventilator Maintenance menu, **VENT MTNCE**, is displayed.
3) Select **VENT MTNCE**.
4) Select **CALIBRATION**.

Calibration

The Calibration menu is used to calibrate the pressure transducers and Flow Valve motor speed for the ventilator. A Calibration Worksheet for recording calibration results is provided on page 6-21.

> ***Note***
>
> To ensure the advantage of all new features and reliability improvements, Pulmonetic Systems requires that the LTV® ventilator's operating software be at, or higher than, version 3.11 when performing any Maintenance and Calibration processes or Component Removal and Replacement procedures. To upgrade the ventilator's operating software, see *Chapter 8 - Component Removal and Replacement, Memory Board*, page 8-63.

The calibration menu is set up as follows:

CALIBRATION

- **AIRWAY**
- **FLOW DIFF** (Not on LTV® 800)
- **VALVE DIFF**
- **O2 INLET** (LTV® 1000 only)
- **MOTOR DRIVE**
- **CAL EXIT**

An asterisk (*) displayed in front of a menu item, for example:

* **FLOW DIFF**

indicates that item has not been calibrated.

For best calibration results, allow the ventilator to warm up by running it for at least 20 minutes prior to beginning the calibration procedures.

> ***Note***
>
> When beginning calibration on any transducer (e.g., **AIRWAY**, **FLOW DIFF**, etc.), continue uninterrupted to the completion of that transducer. If several minutes expire during the calibration of a transducer, the calibration of that transducer should be repeated, as the transducers may drift over time.

If **CAL FAIL** appears at any time during a calibration process, press Select to exit the calibration, then reenter the calibration and perform the complete process again. Calibrations may fail because the calibration pressure was unstable or outside the expected range.

Airway Pressure Calibration

To perform the airway pressure calibration, you will need the following equipment:

- Calibration Syringe Assembly[13], P/N 11471, with a T-connection to a pressure manometer (0-90 cmH_2O).

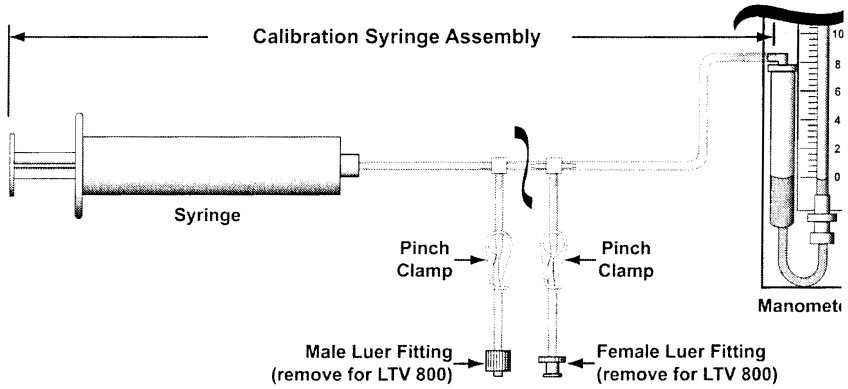

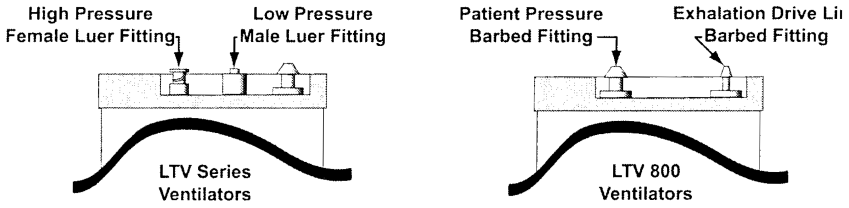

To calibrate the airway pressure transducer:

1) Press the Select button while **AIRWAY** is displayed.

   AP 50 $^{C}_{M}H_2O$ is displayed.

2) Disconnect the sense lines from the side of the ventilator:
   - For LTV® Series Ventilators; disconnect the High and Low pressure sense lines
   - For the LTV® 800 Ventilator; disconnect the Patient Pressure sense line.

3) For LTV® Series Ventilators; connect the Male Luer Fitting from the Calibration Syringe Assembly to the High Pressure Female Luer Fitting on the ventilator. Increase to and maintain the pressure at 50.0 cmH_2O. Use the pinch clamp on the low pressure side between the Calibration Syringe Assembly and the female luer fitting to hold the pressure steady.

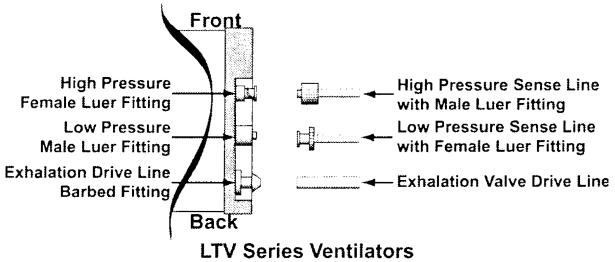

LTV Series Ventilators

4) For LTV® 800 Ventilators; connect the tube from the Calibration Syringe Assembly (luer fitting removed) to the Patient Pressure barb fitting on the ventilator. Increase tc and maintain the pressure at 50.0 cmH_2O.

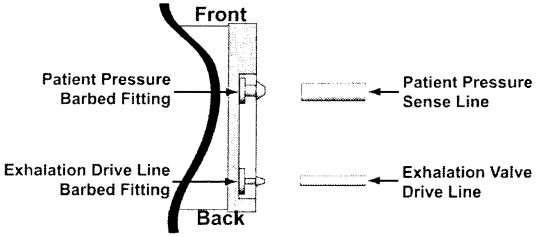

LTV 800 Ventilators

5) Observe the numbers displayed in the Tidal Volume setting window. When the displayed value is stable, press Select.

   Record the number, that was displayed when you pressed Select, on the Calibration Work Sheet on page 6-21.

   - **AP 0 $^{C}{}_{M}H_2O$** is displayed.

6) With the LTV® Series Ventilators high and low pressure sense lines, or the LTV® 800 Ventilator Patient Pressure sense line disconnected from the side of the vent so that the connection(s) are open to ambient room air, observe the numbers displayed in the Tidal Volume setting window. When the displayed value is stable, press Select.

   Record the number that was displayed when you pressed Select on the calibration worksheet.

   - For LTV® Series Ventilators; **FLOW DIFF** is displayed if the calibration was successful.
   - For LTV® 800 Ventilators; **VALVE DIFF** is displayed if the calibration was successful.

If **CAL FAIL** appears at any time, press Select to exit the calibration. When **AIRWAY** is displayed, press Select and perform the calibration again.

Flow Differential Calibration[14]

To perform the flow differential calibration, you will need the following equipment:

- Calibration Syringe Assembly[15], P/N 11471, with a T-connection to a pressure manometer (0-90 cmH_2O). The pinch clamps should be used between each luer fitting and the T-connection to block off the unused luer fitting for each step in this procedure.
- Syringe with a T-connection to a test lung or other large-compliance reservoir and a male luer fitting.

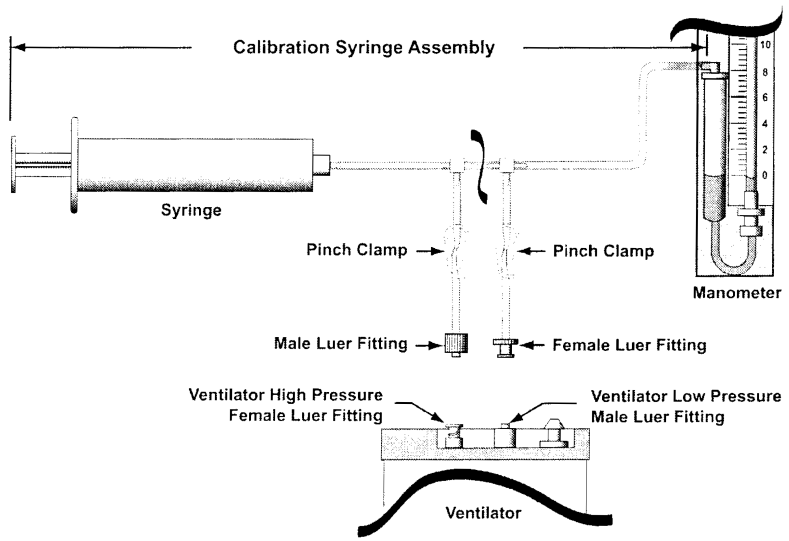

To calibrate the flow differential transducer:

1) Press the Select button while **FLOW DIFF** is displayed. If the appropriate setting for the Analog Board installed has been selected (See Analog Configuration menu on page 6-36) the following will be displayed;
   - **FD -30 $^{C}_{M}H_2O$** is displayed for ventilators with either Analog PCBA P/N 10643 (Rev D or higher), or P/N 10136 (Rev F or higher) installed. Proceed to the next step.
   - **FD 30 $^{C}_{M}H_2O$** is displayed for ventilators with Analog PCBA P/N 10136 (Rev E or lower) installed. Proceed to step 4.

[14] Not applicable to LTV® 800

2) Connect the female luer fitting from the Calibration Syringe Assembly to the Low Pressure Male Luer Fitting. Pinch off the tubing on the Syringe Calibration Assembly to the male luer fitting, and increase and maintain the pressure at 30.0 $^{C}_{M}H_2O$.

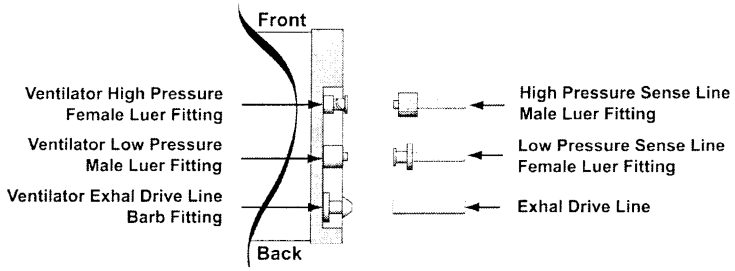

Observe the numbers displayed in the Tidal Volume setting window. When the displayed value is stable, press Select.

Record the number that was displayed when you pressed Select on the Calibration Worksheet on page 6-21.

FD 0 $^{C}_{M}H_2O$ is displayed.

3) Disconnect from the ventilator so the connection is open to ambient room air. Observe the numbers displayed in the Tidal Volume setting window. When the displayed value is stable, press Select.

Record the number that was displayed when you pressed Select on the Calibration Work Sheet.

FD 30 $^{C}_{M}H_2O$ is displayed.

4) Connect the male luer fitting from the Calibration Syringe Assembly to the High Pressure Female Luer Fitting. Pinch off the tubing between the Calibration Syringe Assembly and the female luer fitting, and increase and maintain the pressure at 30.0 $^{C}_{M}H_2O$.

Observe the numbers displayed in the Tidal Volume setting window. When the displayed value is stable, press Select.

Record the number that was displayed when you pressed Select on the Calibration Worksheet.

FD 0 $^{C}_{M}H_2O$ is displayed.

5) Disconnect from the ventilator so the connection is open to ambient room air. Observe the numbers displayed in the Tidal Volume setting window. When the displayed value is stable, press Select.

Record the number that was displayed when you pressed Select on the Calibration Worksheet.

FD 30 $^{C}_{M}H_2O$ is displayed.

6) Connect the male luer fitting from the Calibration Syringe Assembly to the high pressure female luer fitting on the side of the ventilator. Decrease and maintain the vacuum until a value in the range of 10 to 150 is displayed in the Tidal Volume Setting window. Adding a large amount of compliance, such as a test lung, to the Calibration Syringe Assembly, will significantly stabilize the readings during this step.

   If a pressure meter is attached to the circuit, you will see a vacuum of approximately -2.5 mm H_20 displayed when you are at this setting. During this step, any value in the range of 10 to 150 displayed in the Tidal Volume window is equally acceptable, but it is crucial that the value displayed in the Tidal Volume window is stable when pressing Select.

   Alternatively, it is also acceptable to apply a small positive pressure to the ventilator low pressure fitting to fulfill this step.

   Record the number that was displayed in the Tidal Volume window, and the number that was displayed in the High Pressure Limit / Low Pressure windows when you pressed Select on the Calibration Worksheet.

   FD 0 $^{C}_{M}H_2O$ is displayed.

7) Disconnect from the ventilator so the connection is open to ambient room air. Observe the numbers displayed in the Tidal Volume setting window. When the displayed value is stable, press Select.

   Record the number that was displayed when you pressed Select on the Calibration Worksheet.

   FD 4015 +/- 70 AD is displayed.

8) Connect the male luer fitting from the Calibration Syringe Assembly to the High Pressure Female Luer Fitting. Increase and maintain the pressure until a value of 3945 to 4085 is displayed in the Tidal Volume window. Adding a large amount of compliance, such as a test lung to the Calibration Syringe Assembly, will significantly stabilize the readings during this step.

   If a pressure meter is attached to the circuit, you will see a pressure of approx +3.0 mm H_20 displayed when you are at this setting. During this step, any value in the range of 3945 to 4085 displayed in the Tidal Volume window is equally acceptable, but it is crucial that the value displayed in the Tidal Volume window is stable when pressing Select.

   Record the number that was displayed in the Tidal Volume window, and the number that was displayed in the High Pressure Limit / Low Pressure windows when you pressed Select on the Calibration Worksheet.

   FD 0 $^{C}_{M}H_2O$ is displayed

9) Disconnect from the ventilator so the connection is open to ambient room air. Observe the numbers displayed in the Tidal Volume setting window. When the displayed value is stable, press Select.

   Record the number that was displayed when you pressed Select on the Calibration Worksheet.

   VALVE DIFF is displayed if the calibration was successful.

If **CAL FAIL** appears at any time, press Select to exit the calibration. When **FLOW DIFF** is displayed, press Select and perform the calibration again.

Valve Differential Calibration

To perform the valve differential calibration, you will need the following equipment:

- Calibration Syringe Assembly[16], P/N 11471, with a T-connection to a pressure manometer (0-90 cmH_2O).

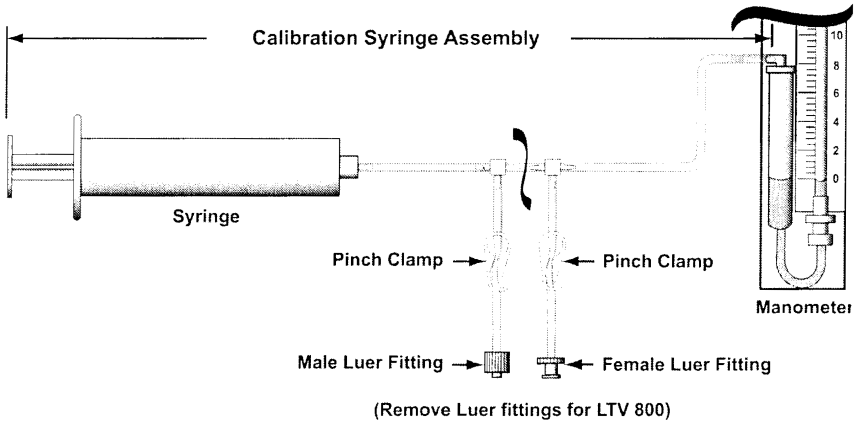

To calibrate the valve differential transducer:

1) Press the Select button while **VALVE DIFF** is displayed.
    a. **VD 15 $^{C}_{M}H_2O$** is displayed.

2) With the back of the ventilator open, (see instructions in *Chapter 8 - Component Removal and Replacement)*, disconnect both flexible tubes from the Valve Differential Transducer on the Analog Board. (Note difference in location of Valve Differential Transducer between internal flexible tube routing configurations; see *pages* 8-31 *through* 8-34.)

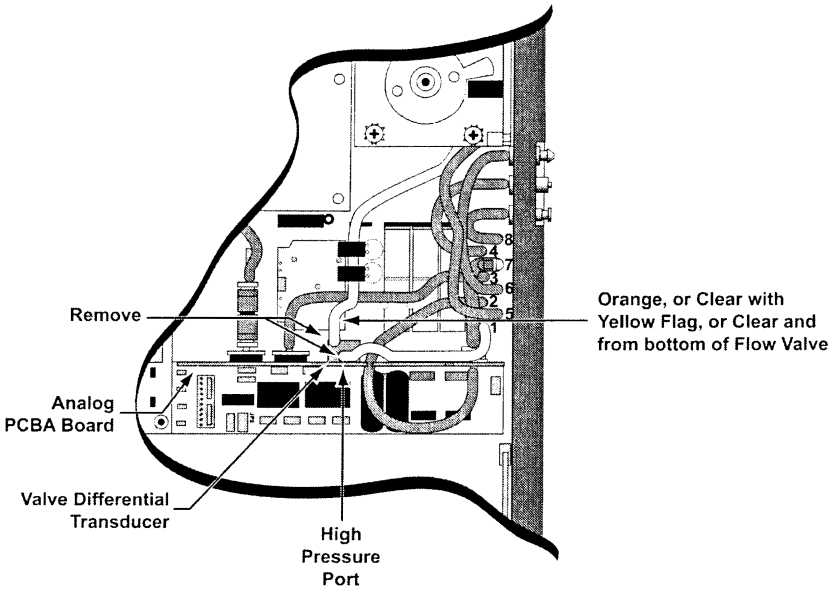

2) Remove a luer fitting from the Calibration Syringe Assembly. Connect the tube from the syringe to the High Pressure Port of the Valve Differential Transducer (the port nearest the Analog Board). Use the Pinch Clamp on the unused line from the Calibration Syringe Assembly to hold the pressure steady. Increase to and maintain the pressure at 15.0 cmH_2O.

   Observe the numbers displayed in the Tidal Volume setting window. When the displayed value is stable, press Select.

   Record the number that was displayed when you pressed Select on the Calibration Worksheet on page 6-21.

   VD 0 $^{C}_{M}H_2O$ is displayed.

3) Disconnect the tube from the syringe to the High Pressure Port of the Valve Differential Transducer and observe the numbers displayed in the Tidal Volume setting window. When the displayed value is stable, press Select.

   Record the number that was displayed when you pressed Select on the Calibration Worksheet.

   - For LTV® 1000 - **O2 INLET** is displayed if the calibration was successful.
   - For LTV® 950, 900 and 800 - **MOTOR DRIVE** is displayed if the calibration was successful.

4) Reconnect the flexible tubes from the Solenoid Manifold and the Flow Valve to the Valve Differential Transducer.

   Depending upon which generation ventilator is being calibrated, there are 3 styles of Flow Valve Tubing – *(see Chapter 8 - Component Removal and Replacement, page 8-48).* The orange, yellow flagged or bottom clear flexible tube from the Flow Valve should be reconnected to the port furthest from the Analog Board, and the clear flexible tube from port #1 on the Solenoid Manifold should be reconnected to the port nearest the Analog Board.

If **CAL FAIL** appears at any time, press Select to exit the calibration. When **VALVE DIFF** is displayed, press Select and perform the calibration again.

O_2 Inlet Pressure Calibration

To perform the O_2 inlet pressure[17] calibration, you will need the following equipment:

- Gas source 50 PSI> with a T-connection to a pressure gauge and an O_2 inlet connector.

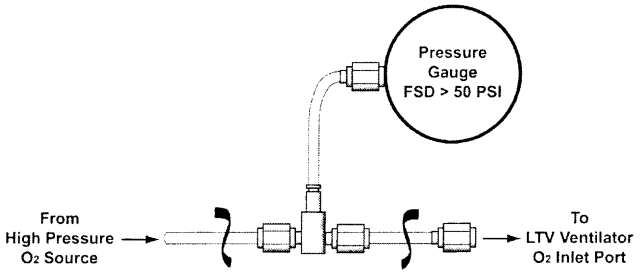

To calibrate the O_2 inlet pressure transducer:

1) Press the Select button while **O2 INLET** is displayed.

   O2 50 PSI is displayed.

2) Connect the high pressure gas source to the O_2 inlet port. Increase to and maintain the pressure at 50.0 PSI.

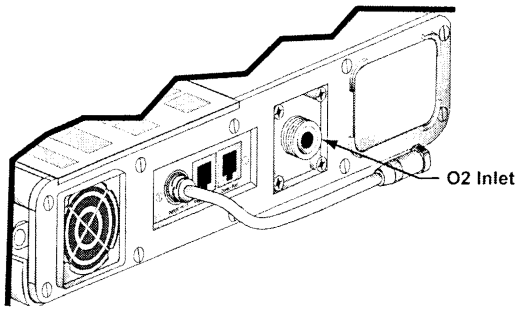

   Observe the numbers displayed in the Tidal Volume setting window. When the displayed value is stable, press Select.

   Record the number that was displayed when you pressed Select on the Calibration Worksheet on page 6-21.

   O2 0 PSI is displayed.

3) With the O_2 inlet port open to ambient room air, observe the numbers displayed in the Tidal Volume setting window. When the displayed value is stable, press Select.

Record the number that was displayed when you pressed Select on the Calibration Worksheet.

MOTOR DRIVE is displayed if the calibration was successful.

If **CAL FAIL** appears at any time, press Select to exit the calibration. When **O2 INLET** is displayed, press Select and perform the calibration again.

Motor Drive Calibration

To perform the motor drive calibration, you will need the following equipment:

- Motor Drive Calibration Tool[18], P/N 10871, connected to a 10 amp 60 Hz amp meter. Amp meter should be set to measure between 400 and 700 ma.

To calibrate the motor drive:

> ***Caution!***
>
> **Calibration Tool and Ventilator Damage** - To avoid damaging the ventilator, turn the ventilator off and disconnect the AC Adapter before attaching the calibration tool.

1) **Turn the ventilator off and disconnect the AC Adapter from the unit.**

2) Disconnect the 4-wire Flow Valve cable from the Motor Board and connect it to the male 4-wire connector on the calibration tool. Connect the female 4-wire connector from the calibration tool to the Motor Board. Turn the calibration tool on.

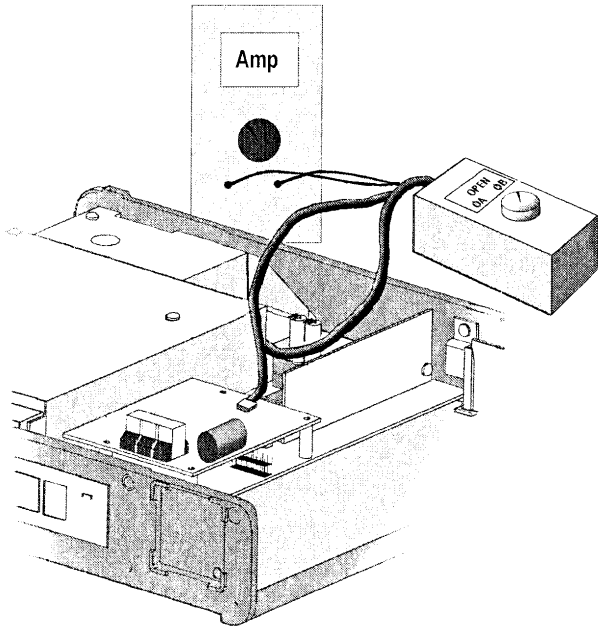

[18] The Motor Drive Calibration tool is available separately, or as part of the Maintenance Calibration Kit, P/N 11566.

3) Set the calibration tool to **ΦA**. Reconnect the AC to the ventilator, turn the ventilator on, silence alarms and enter **CALIBRATION**. Turn to **MOTOR DRIVE** and press the Select button.

   ΦA:+600ma: xxx is displayed where the xxx is a numeric value.

4) The Phase A amp meter will show a positive value. Turn the Set Value knob on the ventilator right or left until the amp meter reads 600ma, or as close as possible.

   Record the numeric value that was displayed in the window on the Calibration Worksheet and press Select.

   ΦA:-600ma: xxx is displayed where the xxx is a numeric value.

5) The Phase A amp meter will show a negative value. Turn the Set Value knob on the ventilator right or left until the amp meter reads -600ma, or as close as possible.

   Record the numeric value that was displayed in the window on the Calibration Worksheet and press Select.

   ΦB:+600ma: xxx is displayed where the xxx is a numeric value.

6) Set the calibration tool to **ΦB**. The Phase B amp meter will show a positive value. Turn the Set Value knob on the ventilator right or left until the amp meter reads 600ma, or as close as possible.

   Record the numeric value that was displayed in the window on the Calibration Worksheet and press Select.

   ΦB:-600ma: xxx is displayed where the xxx is a numeric value.

7) The Phase B amp meter will show a negative value. Turn the Set Value knob on the ventilator right or left until the amp meter reads -600ma, or as close as possible.

   Record the numeric value that was displayed in the window on the Calibration Worksheet and press Select.

   CAL EXIT is displayed if the calibration was successful.

8) Turn the test tool off. Power the unit off and disconnect the AC from the unit. Disconnect the test tool connections from the vent and reconnect the 4-wire Flow Valve cable to the Motor Board.

If **CAL FAIL** appears at any time, press Select to exit the calibration. When **MOTOR DRIVE** is displayed, press Select and perform the calibration again.

Vent Maintenance Exit

The Ventilator will not resume normal operation while the maintenance mode dip switch is set.

To exit maintenance mode:

1) Turn the ventilator off.

2) Locate dip switch #5 and set it to the OFF position (towards the outside of the ventilator.) Verify that dip switches #6 and #8 remain in the ON position.

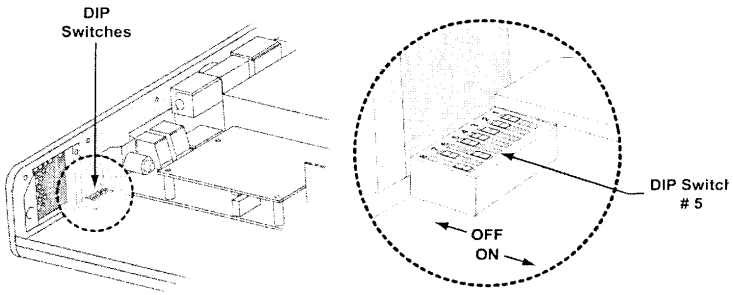

3) Replace the Back Panel of the ventilator. For instructions on how to replace the Back Panel, see *Chapter 8 - Component Removal and Replacement*.

4) Turn the ventilator on.

Calibration Worksheet

SERIAL NUMBER: _____ CONDUCTED BY: _____

MEMORY BOARD SOFTWARE VER.: _____ DATE: _____

TEST DESCRIPTION	MEAS. VALUE	REQUIREMENT	ACCEPTABLE A/D COUNTS	P / F
VENTILATOR CALIBRATION				
Airway Pressure				
@ 50 cmH_2O		Enter displayed value	733 - 1570	
@ 50 Ambient		Enter displayed value	10 - 400	
Flow Differential Pressure [19]				
FD (BiDir) @ -30 cmH_2O		Enter displayed value	64 - 3240	
FD (BiDir) @ Ambient (O cmH_2O)		Enter displayed value	3180 - 4045	
FD (Wide) @ 30 cmH_2O		Enter displayed value	854 - 4030	
FD (Wide) @ Ambient (O cmH_2O)		Enter displayed value	10 - 400	
FD (Narrow) @ 80 +/- 70 AD		Enter value displayed under Tidal Volume window	10 - 150	
		Enter valve displayed under HPL / LP windows	N/A	
FD (Narrow) @ Ambient (O cmH_2O)		Enter displayed value	128 - 3968	
FD (Narrow) @ 4015 +/- 70 AD		Enter value displayed under Tidal Volume window	3945 - 4085	
		Enter valve displayed under HPL / LP windows	N/A	
FD (Narrow) @ Ambient (O cmH_2O)		Enter displayed value	128 - 3968	
Valve Differential Pressure				
VD @15 cmH_2O		Enter displayed value	1925 - 2340	
VD @ Ambient		Enter displayed value	40 - 328	
Oxygen Pressure [20]				
O_2 @ 50 psig		Enter displayed value	900 - 1822	
O_2 @ Ambient (O cmH_2O)		Enter displayed value	122 - 246	
Stepper Motor				
Phase A / +600 ma		Enter displayed value	N/A	
Phase A / -600 ma		Enter displayed value	N/A	
Phase B / +600 ma		Enter displayed value	N/A	
Phase B / -600 ma		Enter displayed value	N/A	
DIP Switch #5 re-set at end of Calib.		Procedure Check	N/A	

[19] Not applicable to LTV® 800

Flow Valve Calibration

The Flow Valve should not normally require recalibration from its factory set values. However, some circumstances, such as mechanical shock, may cause the Flow Valve calibration to change from its factory-set condition. This Flow Valve calibration procedure can be used to adjust the Flow Valve calibration setting to compensate for improper flows measured during the Performance Checkout procedure.

LTV® software releases 1.49 and greater include an adjustable **VHOME** option to allow for field calibration of the Flow Valve. Specifically, the location of the Flow Valve **HOME** position Flag can be set relative to the position sensor.

Proper ventilator flow performance depends on several conditions, such as transducer calibration and lack of leaks in the airway passages, in addition to Flow Valve calibration. Flow valve recalibration should only be performed after all other factors affecting flow performance are verified to be correct. This procedure is designed so that it checks the other factors contributing to flow performance before adjusting the Flow Valve calibration. For this reason, it is important to follow this Flow Valve calibration procedure completely, and in the stated order. Enter the measurements on the Flow Valve Calibration Worksheet on page 6-26.

Caution !

Recalibration of the Flow Valve - When recalibrating the Flow Valve;

- This procedure must be followed completely, and in the listed order of events.
- Calibration of the Valve Differential (see page 6-13) and Motor Drive (see page 6-18) must be performed prior to performing Flow Valve calibration.

1) Determine the current configuration of the Flow Valve.
   - Turn on the LTV® in the **VENT CHECK** mode. (Push and hold the **SELECT** button while the unit powers on).
   - Turn the Rotary Knob to the **VENT OP** menu and push the **SELECT** button.
   - Turn the Rotary Knob to the **VHOME XXX** display and record the value.

VHOME	**244**	**125+/-10**	**220+/- 20**[21]
Flow Valve Poppet	Delrin	Stainless steel Cone	Stainless steel Sphere

Flow valves with Delrin poppets cannot be calibrated according to this procedure. If the Flow Valve is out of calibration and contains a Delrin poppet, it should be replaced with another Flow Valve.

21 [illegible]

2) Warm the ventilator up by running it at the following nominal settings on a test lung for approximately 1 hour. Measure the flow in Vent Maintenance / Servo mode at 4000 rpm and 10 lpm. The measured flow should be 9.0 lpm – 11.0 lpm for LTV® 950 or LTV® 900, and 9.5 lpm – 10.5 lpm for LTV® 1000. If the measured flow is within this range, then the flow is within specification, and there is no need to continue with this procedure; otherwise proceed.

3) Place the ventilator in an ESD-safe environment, and use ESD controls. Remove the lower Weldment from the ventilator. Perform a visual inspection of the Flow Valve:

- Is the Motor Bracket interfering with the Turbine Manifold?
- Is the Motor Bracket interfering with the side Weldment?
- Are any of the screws loose, including the screws for the Drive Band, Motor Bracket, Sensor PCB, and Flag?
- Are there any errors in the flexible tubes routing to the Flow Valve? This includes the flexible tubes connecting to the bypass valve and the high and low-pressure ports connecting to the Solenoid Manifold and Differential Pressure Transducer.

4) Run Leak Test in **VENT CHECK** mode. Block the patient outlet port and the exhalation drive port. Test should pass with values of 0.3 or less.

5) Calibrate the valve differential pressure transducer at 0 and 15 cmH_2O.

6) **Stepper Motor Calibration:** Remove power from the ventilator, and connect the step motor current calibration box with current meter. In **VENT MNTCE** go to **Calibration: Motor Drive**. Calibrate the currents for phase A and B, per the Motor Drive Calibration procedure (see page 6-18).

7) Warm the ventilator up by running it at the following nominal settings on a test lung for approximately 1 hour; Volume Control, 12 bpm, 500 ml, 1.5 sec. Recheck the flow in **Vent Maintenance / Servo** mode at 4000 rpm and 10 lpm. The measured flow should be 9.0 lpm – 11.0 lpm for LTV® 950 or LTV® 900, and 9.5 lpm – 10.5 lpm for LTV® 1000. If the measured flow is within this range, then the flow is within specification, and there is no need to continue with this procedure; otherwise proceed.

8) **Recalibrate the Flow Valve as follows:**

a) Using ESD safe protocol, disconnect power from the ventilator and remove the Back Panel. Turn on DIP switch #5.

b) Reconnect external power and turn the ventilator on in **VENT MTNCE** mode.

c) Turn the **SERVO** on in the **VENT MTNCE** menu. Push the tidal volume button once and change the step position to the starting position:

- For the stainless steel sphere flow valve, use the **VHOME** position labeled on the Flow Valve.
- For the stainless steel cone flow valve, use the value 125.

d) Connect a calibrated Flow Meter **BTPD** (Body Temperature Pressure Dry) to the Flow Valve outlet port.

e) Determine the desired flow at 15 cmH_2O: Record the **FVt** temperature reading from the **RT XDCR DATA** menu. Use the table below to determine the appropriate delivered flow based on the recorded temperature. If the LTV® does not have a Thermistor Cable (see *illustration below*), then use the value 11.5 lpm.

FVt	Desired Flow (lpm)
62.01 – 67.00	11.29
67.01 – 72.00	11.25
72.01 – 77.00	11.21
77.01 – 82.00	11.16
82.01 – 87.00	11.12

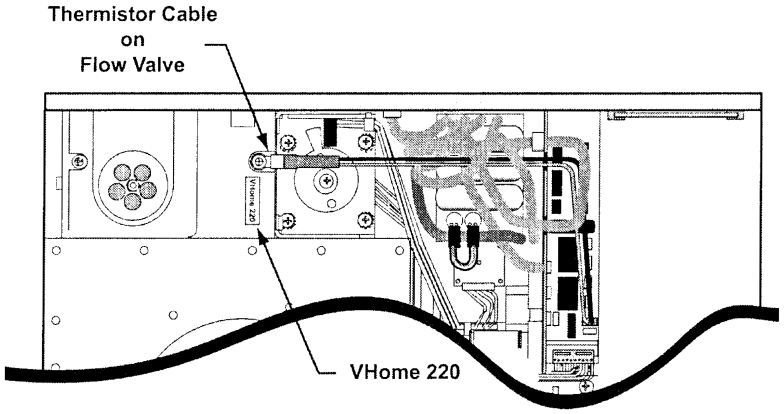

f) Monitor the **FVd** pressure from the **RT XDCR DATA** menu. Adjust the turbine speed until the **FVd** pressure reaches 15.00 +/-.10 cmH_2O.

g) Adjust the Step position (Tidal Volume button) until the delivered flow matches the desired flow as shown above. Be sure to press the Manual Breath button after each adjustment.

h) From the adjusted value, record the magnitude of the adjustment from 220 (125 for the cone poppet). For example, if the adjusted step position is 215, then the magnitude of the change would be 220-215= -5 steps.

i) Turn the Servo off. From the **VENT MTNCE**, **FLOW VALVE** menu adjust the **VHOME** by the negative value of the value in the previous step. For example for an adjustment value of –5 from the previous step, increase the **VHOME** value by +5. Push the Select button before exiting this menu. Push the control lock button to exit this menu.

- The adjustable range for the stainless steel sphere flow valve is 200 – 240.
- The adjustable range for the stainless steel cone flow valve is 115 – 135.

j) Turn the Servo on. Change the step position to 220 (125 for the cone poppet) and measure the flow.

k) Continue the steps f) thru j) until the delivered flow matches the required flow with a **FVd** = 15.00 cmH_2O. Be sure to frequently check the **FVt** temperature reading to make certain the required flow value is appropriate for the monitored flow.

l) Record the ending VHome position, turbine speed, and measured flow on the Flow Valve Calibration Worksheet on page 6-26.

Flow Valve Calibration Worksheet

SERIAL NUMBER:	_____	CONDUCTED BY:	_____
MEMORY BOARD SOFTWARE VER.:	_____	DATE:	_____

TEST DESCRIPTION	MEAS. VALUE	REQUIREMENT	ACCEPTABLE A/D COUNTS
FLOW VALVE CALIBRATION			
Calibration Date:			
Flow Valve Calibration			
1) Determine Flow Valve configuration		Enter VHOME value (244, 125 +/-10, 220 +/-20)	N/A
2) Measure 10 lpm flow		Enter measured value LTV 950 & 900 Pass= 10 lpm +/- 1.0 lpm LTV 1000 Pass= 10 lpm +/- 0.5 lpm	N/A
3) Perform visual inspection		Enter inspection result	N/A
4) Leak test in VENT CHECK		Enter displayed value (Pass= 0.3 or less)	N/A
5) Calibrate valve differential transducer			
VD @ Ambient (cmH_2O)		Enter displayed value	40 - 328
VD @ 15 cmH_2O		Enter displayed value	1925 - 2340
6) Calibrate stepper motor			
Phase A / +600 ma		Enter displayed value	N/A
Phase A / -600 ma		Enter displayed value	N/A
Phase B / +600 ma		Enter displayed value	N/A
Phase B / -600 ma		Enter displayed value	N/A
7) Measure 10 lpm flow		Enter measured value LTV 950 & 900 Pass= 10 lpm +/- 1.0 lpm LTV 1000 Pass= 10 lpm +/- 0.5 lpm	N/A
8 e) Determine desired flow at FVd = 15 cmH_2O		Enter value from table	N/A
8 k) Flow valve calibration results			
VHOME position		Enter final VHOME position	N/A
TS (Turbine speed)		Enter turbine speed for FVd = 15 cmH_2O	N/A
Measure final 10 lpm flow		Enter measured value	N/A

Servo

The Servo feature allows you to control and verify certain ventilator functions. While the servo function is on, the ventilator will continuously deliver gas according to the highlighted settings. Gas may be delivered by:

- turbine speed and Flow Valve step position
- turbine speed and flow in lpm

The Servo functions may be used to verify ventilator operation or diagnose problems by setting specific conditions on the ventilator and monitoring the system either externally (e.g. with a flow meter or pressure gauge) or internally (by using the monitored values under the **RT XDCR DATA** menu). For example, delivered flow can be verified[22] by setting the flow to a specified lpm[23] and connecting a flow meter to the patient wye. In addition, the monitored flow (**FTx**) and other data can be checked under the **RT XDCR DATA** menu.

The servo menu is set up as follows:

SERVO

SERVO OFF
SERVO ON

To enable the servo functions, press Select while **SERVO ON** is displayed. The following displays are turned on:

Display	Purpose
Tidal Volume	Sets the Flow Valve step position
Insp Time	Sets the flow in lpm
O_2%	Sets the delivered O_2% [24]
High Pres Limit / Low Pres	Sets the turbine speed

The ventilator will deliver gas according to the highlighted displays; dimmed displays do not affect the gas delivery.

To turn off the servo functions, press Select while **SERVO OFF** is displayed. Servo functions are automatically turned off when you enter the Calibration menu.

To modify a SERVO control setting:

1) Press the associated button to select the control.
2) Turn the set value knob until the desired setting is displayed.
3) Press the button again to accept the setting.

---

[22] For information on performance tolerances, see Appendix A - Ventilator Specifications in the LTV® Series Ventilator Operator's Manual.

[23] Turbine speed must be set to an appropriate value for flow to be delivered accurately.

[24] O_2 servo is available on LTV® 1000 only

To select delivery by Flow Valve step position, press Tidal Volume twice. The controls for step position and turbine speed will be highlighted to indicate they are active

To select delivery by lpm, press Insp Time twice. The controls for flow, turbine speed and O_2% will be highlighted to indicate they are active.

Oxygen blending is active only when delivery by lpm is selected.

To home the Flow Valve, press Manual Breath. After the home is complete, the valve will return to its previous position.

The servo function is automatically turned off when you enter calibration.

Solenoid

The Solenoid menu is used to test the operation of the solenoids. The menu is set up as follows:

SOLENOID

- **ExhPilot OFF**
- **Purge OFF** (Not on LTV® 800 with software version 3.11 or lower)
- **Apres OFF**
- **ExhDiffP OFF** (Not on LTV® 800)
- **O2 #1 OFF** (LTV® 1000 only)
- **O2 #2 OFF** (LTV® 1000 only)
- **O2 #3 OFF** (LTV® 1000 only)
- **O2 #4 OFF** (LTV® 1000 only)
- **EXIT**

Use the control knob to rotate between solenoid options. To change the state of any solenoid, press the Select button while it is displayed in the window. Pressing Select toggles the state of the solenoid on and off.

Solenoids are automatically set to the off state when you enter the Calibration menu.

Step Test

The Flow Valve Stepper Motor Synchronization Test is used to exercise the Flow Valve and insure LTV® software / hardware synchronization.

1) Set the VENT MAINTENANCE mode (**VENT MTNCE)**.

2) From the **VENT MTNCE** display, press the Select button and rotate the Set Value knob to select the **STEP TEST** display.

3) Press the Select button to start the test.

   The Flow Valve stepper motor will begin to actuate continuously for approximately seven (7) minutes. During the test, the status monitor window display will change continuously. To the right side of the display a numeric value will appear (for example, "3") to indicate the maximum number of step errors that have occurred during the test.

   Upon completion of the test, the status monitor window will automatically display the results of the test with one of the following messages:

   PASS X (where "X" is a number of 8 or less)

   or,

   FAIL X (where "X" is a number greater than 8)

Ventilator Settings and Procedure	Performance Requirement
• Steps 1 through 3 (above).	**PASS X**

Watchdog Test

The watchdog timer is used to verify that essential parts of the software are running at the correct times. If the software does not update the watchdog timer correctly, the watchdog timer causes the ventilator to inop. This item tests that the watchdog timer is operating correctly.

To run the watchdog test:

1) Press Select while **WDOG TEST** is displayed.
2) The ventilator will perform a reset and the normal POST tests, then resume operating.
   - For ventilators with software version 3.13 or higher, at the end of POST the audible alarm will sound and a **RESET** alarm message will be displayed.
   - Press the Silence/Reset button twice to clear the alarm and the ventilator will resume normal operation.

If the Watchdog Test fails:

Problem	Possible Cause	What To Do
Vent does not reset when watchdog test is performed.	Early version of software.	In the initial LTV® Series Ventilato software versions, the ventilator g to an inop state instead of perform a reset. This is normal. Clear the reset alarm by pressing Silence/Reset and resume operati by pressing the On/Standby buttor The vent will perform the POST te and resume operation in the vent maintenance mode.
	Defective main board.	Replace the main board. See *Chapter 8 - Main Board Assembly* instructions.

Configuration

The Configuration menu is used to set the operational parameters for the ventilator. The Configuration menu is set up as follows:

CONFIG

- **MODEL**
- **FLOW VALVE**
- **TEMP COMP**
- **ANALOG BOARD**
- **SERIAL NUM**[25]
- **CONFIG EXIT**

1) Use the control knob to rotate between options.
2) To select an option, press the Select button while it is displayed in the window.
3) Pressing the Control Lock exits the menu without making any selections within the menu.

The menu selections are described further in the following pages.

[25] The Serial Number menu option is only available on ventilators with software version 3.11 and higher and is for use by Pulmonetic Systems personnel only.

Model Selection

The model selection menu is used to select the model of LTV® Series Ventilator. This option determines which functions are available for the selected unit. The model selected should match the model number on the front of the ventilator. The menu is set up as follows:

MODEL

- **LTV 1000**
- **LTV 900**
- **LTV 950**
- **LTV 800**
- **LTV EXIT**

> ***Note***
>
> Selecting an incorrect model number will not upgrade the unit and will cause display errors if used improperly.

1) Use the control knob to rotate between model options.
2) To select a model, press the Select button while it is displayed in the window.
3) Pressing the Control Lock exits the menu without making any modifications to the model.
4) The model selection can be viewed during normal operation in the **VENT OP** menu.

Selecting an incorrect model number will cause displays to be lit or turned off inappropriately. The following features are affected by the model selection:

Feature	LTV® 1000	LTV® 950	LTV® 900	LTV® 80(
Volume Mode Selection	Yes	Yes	Yes	Yes
Pressure Mode Selection	Yes	Yes	No	No
Pressure Support	Yes	Yes	Yes	No
O_2%	Yes	No	No	No
Low Pressure O_2 Source	Yes	Yes	Yes	Yes
Inspiratory and Expiratory Hold	Yes	No	No	No

Flow Valve Home Position

The Flow Valve home position menu is used to select the home step position for the Flow Valve. The position selected should match the Flow Valve. The menu is set up as follows:

FLOW VALVE

VHome 115 through **135**
VHome 200 through **240**
VHome 244
VHome EXIT

1) Use the control knob to rotate between home position options.
2) To select a home position, press the Select button while it is displayed in the window.
3) Pressing the Control Lock exits the menu without making any modifications to the home position.
4) The valve home position selection can be viewed during normal operation in the **VENT OP** menu.

Selecting an incorrect valve home position will cause the Flow Valve to operate incorrectly, resulting in volumes and flows that are too large or too small. To determine which setting is correct for the ventilator:

Flow Valve has:	Use VHome setting:
Two clear flexible tubes	244
One clear flexible tube and One clear flexible tube with a yellow flag	244
One clear flexible tube and One opaque orange flexible tube No VHome Label	125 (range = 115 - 135)[26]
One clear flexible tube, One opaque flexible tube, Thermistor Cable and VHome label in the range of 200 - 240	Setting printed on Vhome Label on Flow Valve (range = 200 - 240)[26]

Note

If Flow Valve with VHome setting of 200 - 240 is installed, also install the Thermistor Cable P/N 11399 (Flow Valve Cable Assy.) between the Flow Valve and the Power PCBA (see *illustration* on page *8-48.)*

[26] [illegible]

Temperature Compensation

The Temperature Compensation menu is used to set the temperature compensation for the Flow Valve on or off. The Configuration menu is set up as follows:

TEMP COMP

TCOMP ON [27]

TCOMP OFF

TCOMP EXIT

1) Use the control knob to rotate between options.
2) To select an option, press the Select button while the desired option is displayed in the window.
3) Pressing the Control Lock exits the menu without making any modifications to the temperature compensation.
4) The temperature compensation selection can be viewed in the **VENT MTNCE** menu when powered up in Vent Maintenance mode.

Selecting an incorrect setting will cause slightly high or slightly low flows and volumes to be delivered. This phenomenon may only exist either when the unit is warm or when the unit is cold.

Use the following guidelines to set this value.

Flow Valve VHome setting	Thermistor Cable	TEMP COMP setting
200 – 240	Thermistor Cable P/N 11399 must be installed between the Flow Valve and the Power PCBA (see page 6-24.)	ON
All other VHome settings	No Thermistor Cable should be installed.	OFF

Refer to page 6-34 regarding the Flow Valve VHome setting.

Analog Board Setting

In LTV® ventilators the Analog Board menu is used to tell the software which type of Analog PCBA is installed in the ventilator. This menu exists for LTV® Ventilator models 900, 950 and 1000 exclusively. The Analog Board configuration menu is set up as follows:

ANALOG BOARD

10136 Rev. F+	(Rev. F or higher is appropriate for LTV® 900, 950 and 1000)
10136 Rev. E-	(Rev. E or lower is appropriate for LTV® 900, 950 and 1000 and not LTM Graphics Monitor Compatible)
10643 Rev. D+	(Rev. D or higher is only available for LTV® 900 and 950)
10643 Rev. C-	(Rev. C or lower is only available for LTV® 900 and 950 and is nc LTM Graphics Monitor Compatible)

ANALOG EXIT

> ***Note***
>
> The correct revision of the Analog PCBA MUST be installed. See *Chapter 8 - Component Removal and Replacement – Analog Board Assembly* on page 8-38.

1) Use the control knob to rotate between options.
2) To select an option, press the Select button while the desired option is displayed in the window.
3) To exit the menu without making any changes to the Analog PCBA selection, press the Control Lock.
4) Selecting an incorrect setting will cause steps to be skipped when calibrating the Flow Differential Pressure transducer, and will prevent the ventilator from being compatible with the LTM Graphic Monitor.

5) The Analog Board setting can be validated by displaying the model number under the **VENT OP** menu and then pressing Select. If "LTM" is displayed, then the Analog Board setting is appropriate.

   Refer to the labeling on the installed Analog Board to determine the part number anc revision.

> ***Note***
>
> If the Analog PCBA has been upgraded to a higher revision, it may have an additional label denoting that revision.

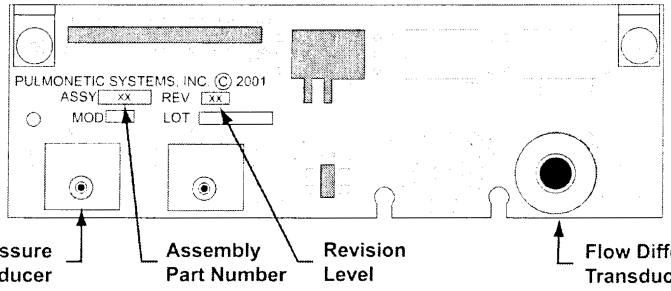

> ***Note***
>
> Analog PCBA P/N 10643 does not contain the oxygen pressure transducer, and cannot be used on LTV® 1000. The selection of Analog PCBA P/N 10643 is not available on LTV® 1000 model ventilators.

Configuration Menu Exit

To exit the configuration menu:

1) Press Select while **CONFIG EXIT** is displayed.
2) **CONFIG** is displayed. To access other Vent Maintenance menu options, turn the Set Value know to the desired item and press Select.

Clear EEPROM

The clear **EEPROM** menu is used to clear sections of the non-volatile[28] EEPROM memory.

The menu is set up as follows:

CLEAR

CLR EVENTS
CLR CONTROLS
CLR CAL
CLR ALL
CLR EXIT

Use the control knob to rotate between clear options. To clear a section of the EEPROM, press the Select button while it is displayed in the window. Pressing the Control Lock exits the menu without clearing data.

> *Caution !*
>
> **CLEAR Function Cautions -** The **CLEAR** function should be used with great care as once a section of the memory is cleared, all data in that section of memory is lost and it cannot be automatically restored.

The selections clear the following data from the EEPROM memory:

Option	Action
CLR EVENTS	Clears the event trace. • **All events and associated dates, times and data are removed.**
CLR CONTROLS	Clears the control settings. • **All settings will be returned to their default values.**
CLR CAL	Clears the calibration records. • **Once this is done, the unit must be recalibrated.**
CLR ALL	Clears events, control settings and calibration records. • **All events and associated dates, times and data are removed.** • **All settings will be returned to their default values.** • **All calibration records are removed, the unit must be recalibrated.**

Vent Maintenance Menu Exit

To exit the vent maintenance menu:

1) Press Select while **EXIT** is displayed.

2) **VENT MTNCE** is displayed. To access the other main extended features menu options, turn the Set Value knob to the desired item and press Select.

3) To return the ventilator to normal operation, see the instructions under *Vent Maintenance Exit* at the beginning of this section.

Chapter 7 - TROUBLESHOOTING

This chapter describes troubleshooting for the LTV® Series Ventilator. Some problems can result from improper operation and can easily be corrected without any modification to the ventilator. Other problems may require that the ventilator be recalibrated or have parts replaced.

Do not attempt to repair or replace any part of the ventilator unless you are trained and authorized for service on the LTV® Series Ventilator.

This chapter is organized into eight sections:

• Displays and Buttons (See *page 7-2*)	Includes problems with control and window displays anc with setting controls.
• Ventilator Performance (See *page 7-6*)	Includes problems with delivered or monitored pressure volume or PEEP, accuracy, sensitivity and triggering.
• Advanced Vte Diagnostic Procedures (See page 7-22)	Includes advanced diagnostic procedures for troubleshooting Vte problems involving transducer accuracy/drift, the pneumatic system and flow valve accuracy.
• Advanced FiO_2 Diagnostic Procedures (See page 7-26)	Includes advanced diagnostic procedures for troubleshooting O_2% concentration (FiO_2) problems involving calibration of the Oxygen Pressure Transduce Flow Valve and O_2 Blender.
• Power and Battery Operation (See page 7-28)	Includes problems with turning the ventilator on, operati from external power sources, battery operation or durati and vent inops.
• Alarms (See page 7-31)	Includes problems with recurring alarms.
• Checkout Test Failures (See page 7-37)	Includes problems detected while performing the **VENT CHECK** and **VENT MTNCE** tests.
• Test Lung Operation (See page 7-41)	Includes problems encountered when operating the ventilator with a test lung.

The troubleshooting tables are organized by symptom, then by possible causes and methods of diagnosing and resolving the problem. If you do not find the symptom you are looking for under one section, you may find it listed under another section, or you may be able to diagnose the problem by reading sections with related symptoms. For information on resolving problems that are not listed here, contact Pulmonetic Systems.

Displays and Buttons

Some of the symptoms listed in this section are part of the normal operation of the ventilator and do not indicate any problem with the ventilator. They are included here for completeness.

Symptoms	Possible Causes	What to Do
Pressure Control display flashing.	Pressure control breath terminated by flow - **PC FLOW TERM** is set to on.	Pressure control breaths are normally terminated when the set inspiratory time expires. Flow termination of pressure control breaths is allowed when **PC FLOW TERM** is set to ON (See the *LTV® Series Ventilator Operator's Manual* for an explanation of this feature.) When a pressure control breath is terminated by flow instead of time, the Pres Control display is flashed.
Pressure Support display flashing.	Pressure support breath terminated by time - set under **TIME TERM**.	Pressure support breaths are normally terminated when the flow drops below the set percentage of the peak flow. Pressure support breaths may also terminate on time when the variable time limit is reached before the flow drops to the set level. (See the *LTV® Series Ventilator Operator's Manual* for an explanation of the **FLOW TERM** and **TIME TERM** features.) When a pressure support breath is terminated based on time, the Pres Support display is flashed.
High Pres Limit display flashing.	**HIGH PRES** alarm occurred.	The High Pres Limit display is flashed and the **HIGH PRES** message is displayed when a high pressure alarm occurs. The display will continue to flash even after the condition clears. (See the *LTV® Series* or *LTV® 800 Ventilator Operator's Manual* for an explanation of the **HIGH PRES** alarm feature.) Check high and low pressure sense lines to be sure they are correctly attached and securely seated at both the ventilator and wye ends.
Low Pressure display flashing.	**LOW PRES** alarm occurred.	The Low Pressure display is flashed and the **LOW PRES** message is displayed when a low pressure alarm occurs. The display will continue to flash even after the condition clears. (See the *LTV® Series* or *LTV® 800 Ventilator Operator's Manual* for an explanation of the **LOW PRES** alarm feature.)

Symptoms	Possible Causes	What to Do
Low Min Vol display flashing.	**LOW MIN VOL** alarm occurred.	The Low Min Vol display is flashed and the **LOW MIN VOL** message is displayed when a low minute volume alarm occurs. The display will continue to flash even after the condition clears. (See the *LTV® Series Ventilator Operator's Manual* for ar explanation of the **LOW MIN VOL** alarm feature.)
O_2% display flashing.	**LOW O2 PRES** or **HIGH O2 PRES** alarm occurred.	The O_2% display is flashed and the **LOW O2 PRES** or **HIGH O2 PRES** message is displayed when a low or high O_2 pressure alarm occurs. The display will continue tc flash even after the condition clears. (See the *LTV® Series Ventilator Operator's Manual* for an explanation of the **LOW O2 PRES** and **HIGH O2 PRES** alarm features.)
Control display flashing when setting a control.	Control setting is limited.	A control's value may be limited by the current settings of other controls. (See the *LTV® Series* or *LTV® 800 Ventilator Operator's Manual* for an explanation of **Control Limiting**.)
A display or LED does not illuminate.	Wrong model selected.	If an incorrect model is selected, the following controls may not be lit and will not operate: Volume / Pressure Mode, Pressure Control, O_2%, Low Pressure O_2 Source. Verify the model number selected in **VENT MTNCE**, **MODEL** matches the model number on the front o the ventilator. See *Chapter 6 - Maintenance & Calibration* for instructions
	Misaligned LED.	If displays are operating but misaligned, remove the main board and realign the LEDs or displays. See *Chapter 8 - Main Board Assembly* for instructions.
	Defective LED or display. Defective main board.	If a display is not operating during the display test, replace the main board. See *Chapter 8 - Main Board Assembly* for instructions.
Ventilator is running but displays are turned off.	Displays are blanked while on battery power.	To conserve battery life while running fror the internal battery, most of the displays are turned off when no changes are made to the control settings for 60 seconds. Tc turn the displays back on, touch any control or button or turn the Set Value knob.
	Defective main board.	Replace the main board. See *Chapter 8 Main Board Assembly* for instructions.

Symptoms	Possible Causes	What to Do
A control doesn't operate. Set Value knob doesn't operate.	Control not active in selected mode.	If a control is dimmed, it is not active in th currently selected mode and changing its setting does not affect ventilation. (See th *LTV® Series* or *LTV® 800 Ventilator Operator's Manual* for an explanation of **Bright, Dim and Blank Control Displays**.)
	Controls are locked.	If the controls are locked, a **LOCKED** message will be displayed when a control is selected. To unlock in **EASY** mode, press and release the Control Lock button. To unlo in **HARD** mode, press and hold the Contr Lock button for 3 seconds. (See the *LTV® Series* or *LTV® 800 Ventilator Operator's Manual* for an explanation of the **CTRL UNLOCK** feature and Control Lock button.)
	Control is not selected.	Before a control value can be changed, th control must be selected. To select a control, press the associated button. When a control is selected it is displayed normal intensity and all other controls are dimmed. (See the *LTV® Series* or *LTV® 800 Ventilator Operator's Manual* for an explanation of how to use the controls.)
	Controls are limited.	A control's value may be limited by the current settings of other controls. To change the value of the current control, change the value of the flashing controls. (See the *LTV® Series* or *LTV® 800 Ventilator Operator's Manual* for an explanation of **Control Limiting**.)
	Wrong model selected.	If an incorrect model is selected, the following controls may not be lit and will not operate: Volume / Pressure Mode, Pressure Control, O_2%, Low Pressure O_2 Source. Verify the model number selected in **VENT MTNCE**, **MODEL** matches the model number on the front of the ventilator. See *Chapter 6 - Maintenance & Calibration* for instructions
	Front panel ribbon cable not properly connected.	Remove the power board to access the ribbon cable connection on the main board. Disconnect and reconnect the fror panel ribbon cable connector. See *Chapter 8 - Main Board Assembly* for instructions. Handle the ribbon cable carefully to avoid scratching or damaging it.

Symptoms	Possible Causes	What to Do
CONTINUED ... *A control doesn't operate.* *Set Value knob doesn't operate.*	Front panel ribbon cable damaged. Defective switch.	Replace the front panel. See *Chapter 8 - Front Panel* for instructions
	Rotary switch is disconnected. Defective rotary switch.	Verify the rotary switch is properly connected. If necessary, replace the rotary switch assembly. See *Chapter 8 - Rotary Knob Assembly* f instructions.
	Defective main board.	Replace the main board. See *Chapter 8 - Main Board Assembly* for instructions.
Can't unlock the controls.	Hard unlock method selected under **CTRL UNLOCK**.	Two unlock methods are available on the LTV® Series Ventilator: (See the *LTV® Series* or *LTV® 800 Ventilator Operator's Manual* for an explanation of this feature.) To unlock in **EASY** mode, press and release the Control Lock button. To unlock in **HARD** mode, press and hold the Control Lock button for 3 seconds.
LMV OFF is displayed	Low Minute Volume alarm is turned off.	These are informational messages only (See the *LTV® Series Ventilator Operator's Manual* for an explanations of these features).
LMV LPPS OFF is displayed	Low Minute Volume alarm is turned off and the LPP ALARM has been set to VC/PC ONLY.	
LPPS OFF is displayed	LPP ALARM has been set to VC/PC ONLY.	

Ventilator Performance

Symptoms	Possible Causes	What to Do
Ventilator is autocycling, monitored volumes are very small, **and RT XDCR DATA** item **FTx** shows negative flows during exhalation and positive flows during inspiration.	Sense lines are reversed.	The sense lines are not designed to be removed from either the wye or the luer fittings. If the sense lines have been removed and replaced incorrectly, they may not seal correctly when replaced. Replace the patient wye and sense lines with a known good assembly.
Ventilator won't allow patient to exhale.	Diaphragm installed backwards or incorrectly seated in exhalation valve.	Open the exhalation valve and remove the diaphragm and spring. Reseat the spring and diaphragm valve and snap the peep valve or peepless valve cap back in place See *Chapter 4 - Cleaning the Exhalation Valve* for a diagram of correct exhalation valve assembly.
	Sense lines occluded, pinched or reversed.	Check high and low pressure sense lines to be sure they are correctly attached and securely seated at both the ventilator and wye ends. Verify lines are not occluded or pinched.
	Internal flexible tubing occluded or pinched. Internal flexible tubing has pinhole leaks or leaking at connections.	This problem will often be accompanied by **XDCR FAULT** alarms. Open the vent and verify that none of the flexible tubes connected to the Solenoid Manifold or analog board are pinched or leaking. See *Chapter 8 - Solenoid Manifold Assembly or Analog Board Assembly* for a routing diagram.
	Defective exhalation drive solenoid.	Replace the Solenoid Manifold. See *Chapter 8 - Solenoid Manifold Assembly* for instructions.
Set pressure not reached and turbine is humming. Turbine sounds like inspiration even during exhalation.	Bypass flexible tube pinched. Pinhole leaks in bypass flexible tube.	If the bypass flexible tube is pinched, it can usually be seen pressed against the louver openings in the bottom of the ventilator case. Open the ventilator and remove the Back Panel. Replace the Back Panel being sure to fit the louvers in between the upper and lower loop of the bypass flexible tube before seating the back cover. If the bypass flexible tube is leaking, replace it.

Symptoms	Possible Causes	What to Do
Monitored volume is high. Delivered volume is high.	Very small ET tube connected directly to wye.	A very small ET tube connected directly t the wye may cause jetting and cause the flow differential to be read incorrectly. To reduce the jetting effect, add a short large bore extension between the ET tube and wye. In this case, the monitored volume is high, but the delivered volume is accurate
	Low side sense line or elbow at patient wye loose or leaking. High or low sense lines are occluded. High or low sense ports in the wye are occluded.	Check high and low pressure sense lines to be sure they are correctly attached and securely seated at both the ventilator and wye ends. Check the luer fitting connections for leaks. Check the elbow connectors at the wye tc be sure they have not loosened or been broken loose. Verify lines are not occluded or pinched.
	Sense lines are reversed.	The sense lines are not designed to be removed from either the wye or the luer fittings. If the sense lines have been removed and replaced incorrectly, they may not seal correctly when replaced. Replace the patient wye and sense lines with a known good assembly.
	Failed autozero.	Perform an autozero under **XDCR ZERO**. See the *LTV® Series* or *LTV® 800 Ventilator Operator's Manual* for more information.
	VHome setting does not match flow valve.	Correct the VHome setting. See *Chapter - Maintenance & Calibration*.
	Bypass flexible tube pinched. Pinhole leaks in bypass flexible tube.	If the bypass flexible tube is pinched, it can usually be seen pressed against the louver openings in the bottom of the ventilator case. Open the ventilator and remove the Back Panel. Replace the Back Panel being sure to fit the louvers in between the upper and lower loop of the bypass flexible tube before seating the back cover. If the bypass flexible tube is leaking, replace it.
	Failed calibration.	Recalibrate the vent. See *Chapter 6 - Maintenance & Calibration* for instructions. If the problem reoccurs after careful recalibration, a transducer may be drifting excessively. Perform the Advanced Vte Diagnostic Procedures, see page 7-22.

Symptoms	Possible Causes	What to Do
CONTINUED... *Monitored volume is high.* *Delivered volume is high.*	Defective flow valve.	Calibrate the Flow Valve. See *Chapter 6 Flow Valve Calibration* for instructions. Perform the Advanced Vte Diagnostic Procedures. see page 7-22.
	Defective turbine. Defective bypass valve. Defective or leaking Solenoid Manifold.	Perform the Advanced Vte Diagnostic Procedures, see page 7-22.
Monitored volume is low. Delivered volume is low.	Circuit leak.	Run a Leak Test and reseat or replace th leaking parts or connections. See *Chapte 2 - Leak Test* for instructions.
	High or low side sense line or elbow at exhalation valve loose or leaking. High or low sense lines are occluded. High or low sense ports in the wye are occluded.	Check high and low pressure sense lines to be sure they are correctly attached anc securely seated at both the ventilator and wye ends. Check the luer fitting connections for leaks. Check the elbow connectors at the wye tc be sure they have not loosened or been broken loose. Verify lines are not occluded or pinched.
	Exhalation drive line leaking or loose. Exhalation valve leaking during inspiration.	Check the exhalation drive line at both the ventilator and exhalation valve ends. Verify the line is securely seated and not leaking. Verify the exhalation valve is not leaking during inspiration. If it is leaking, open the exhalation valve and remove the diaphragm and spring. Reseat the spring and diaphragm valve and snap the peep valve back in place. See *Chapter 4 - Cleaning the Exhalation Valve* for a diagram of correct exhalation valve assembly. If necessary, replace the exhalation diaphragm, PEEP spring or exhalation valve with a new one.
	Sense lines are reversed.	The sense lines are not designed to be removed from either the wye or the luer fittings. If the sense lines have been removed and replaced incorrectly, they may not seal correctly when replaced. Replace the patient wye and sense lines with a known good assembly.

Symptoms	Possible Causes	What to Do
CONTINUED ... *Monitored volume is low.* *Delivered volume is low.*	Leak Compensation is not on.	Verify that the Leak Compensation extended features option is set to **On** (default setting is off). See the *LTV® Series* or *LTV® 800 Ventilator Operator's Manual* for more information.
	Failed autozero.	Perform an autozero under **XDCR ZERO** See the *LTV® Series* or *LTV® 800 Ventilator Operator's Manual* for more information.
	Bypass flexible tube pinched. Pinhole leaks in bypass flexible tube.	If the bypass flexible tube is pinched, it can usually be seen pressed against the louver openings in the bottom of the ventilator case. Open the ventilator and remove the Back Panel. Replace the Back Panel being sure to fit the louvers in between the upper and lower loop of the bypass flexible tube before seating the back cover. If the bypass flexible tube is leaking, replace it.
	VHome setting does not match flow valve.	Correct the VHome setting. See *Chapter - Maintenance & Calibration.*
	Failed calibration.	Recalibrate the vent. See *Chapter 6 - Maintenance & Calibration* for instructions If the problem reoccurs after careful recalibration, a transducer may be drifting excessively. Perform the Advanced Vte Diagnostic Procedures, see page 7-22.
	Defective flow valve.	Calibrate the flow valve. See *Chapter 6 - Flow Valve Calibration* for instructions. Perform the Advanced Vte Diagnostic Procedures, see page 7-22.
	Defective turbine.	Perform the Advanced Vte Diagnostic Procedures, see page 7-22.

Symptoms	Possible Causes	What to Do
Delivered pressure is low. PEEP is low. ventilator is autocycling. Delivered pressure is low. Monitored pressure is low.	Circuit leak.	Run a Leak Test and reseat or replace the leaking parts or connections. See *Chapter 2 - Leak Test* for instructions.
	High or low side sense line or elbow at patient wye loose or leaking. High or low sense lines are occluded. High or low sense ports in the wye are occluded.	Check high and low pressure sense lines to be sure they are correctly attached and securely seated at both the ventilator and wye ends. Check the luer fitting connections for leaks. Check the elbow connectors at the wye to be sure they have not loosened or been broken loose. Verify lines are not occluded or pinched. Check the exhalation drive line at both the ventilator and exhalation valve ends. Verify the line is securely seated and not leaking.
	Exhalation drive line leaking or loose. Exhalation valve leaking during inspiration.	Check the exhalation drive line at both the ventilator and exhalation valve ends. Verify the line is securely seated and not leaking. Verify the exhalation valve is not leaking during inspiration. If it is leaking, open the exhalation valve and remove the diaphragm and spring. Reseat the spring and diaphragm valve and snap the peep valve back in place. See *Chapter 4 - Cleaning the Exhalation Valve* for a diagram of correct exhalation valve assembly. If necessary, replace the exhalation diaphragm, PEEP spring or exhalation valve with a new one.
	Sense lines are reversed.	The sense lines are not designed to be removed from either the wye or the luer fittings. If the sense lines have been removed and replaced incorrectly, they may not seal correctly when replaced. Replace the patient wye and sense lines with a known good assembly.
	Leak Compensation is not on.	Verify that the Leak Compensation extended features option is set to **On** (default setting is off). See the *LTV® Series Ventilator Operator's Manual* for more information.

Symptoms	Possible Causes	What to Do
CONTINUED ... *Delivered pressure is low, PEEP is low, ventilator is autocycling.* *Delivered pressure is low.* *Monitored pressure is low.*	Failed autozero.	Perform an autozero under XDCR ZERO. See the *LTV® Series* or *LTV® 800 Ventilator Operator's Manual* for more information.
	VHome setting does not match flow valve.	Correct the VHome setting. See *Chapter - Maintenance & Calibration.*
	Failed calibration.	Recalibrate the vent. See *Chapter 6 - Maintenance & Calibration* for instructions If the problem reoccurs after careful recalibration, a transducer may be drifting excessively. Perform the Advanced Vte Diagnostic Procedures, see page 7-22.
	Bypass flexible tube pinched. Pinhole leaks in bypass flexible tube.	If the bypass flexible tube is pinched, it can usually be seen pressed against the louver openings in the bottom of the ventilator case. Open the ventilator and remove the Back Panel. Replace the Back Panel being sure to fit the louvers in between the upper and lower loop of the bypass flexible tube before seating the back cover. If the bypass flexible tube is leaking, replace it.
	Internal flexible tubing occluded or pinched. Internal flexible tubing has pinhole leaks or leaking at connections.	This problem will often be accompanied by **XDCR FAULT** alarms. Open the vent and verify that none of the flexible tubes connected to the Solenoid Manifold or analog board are pinched or leaking. See *Chapter 8 - Solenoid Manifold Assembly or Analog Board Assembly* for a routing diagram.
	Defective flow valve.	Calibrate the flow valve. See *Chapter 6 - Flow Valve Calibration* for instructions. Perform the Advanced Vte Diagnostic Procedures, see page 7-22.
	Defective turbine. Defective analog board.	Perform the Advanced Vte Diagnostic Procedures, see page 7-22.
	Defective power board.	Replace the power board. See *Chapter 8 Power Board Assembly* for instructions.

Symptoms	Possible Causes	What to Do
Delivered pressure is high. Monitored pressure is high.	Diaphragm is incorrectly seated in exhalation valve.	Open the exhalation valve and remove the diaphragm and spring. Reseat the spring and diaphragm valve and snap the peep valve or peepless valve cap back in place See *page* 4-2 for a diagram of correct exhalation valve assembly.
	High or low side sense line or elbow at patient wye loose or leaking. High or low sense lines are occluded. High or low sense ports in the wye are occluded.	Check high and low pressure sense lines to be sure they are correctly attached and securely seated at both the ventilator and wye ends. Check the luer fitting connections for leaks. Check the elbow connectors at the wye to be sure they have not loosened or been broken loose. Verify lines are not occluded or pinched. Check the exhalation drive line at both the ventilator and exhalation valve ends. Verify the line is securely seated and not leaking.
	Failed autozero.	Perform an autozero under **XDCR ZERO**. See the *LTV® Series* or *LTV® 800 Ventilator Operator's Manual* for more information.
	VHome setting does not match flow valve.	Correct the VHome setting. See *Chapter - Maintenance & Calibration.*
	Failed calibration.	Recalibrate the vent. See *Chapter 6 - Maintenance & Calibration* for instructions If the problem reoccurs after careful recalibration, a transducer may be drifting excessively. Perform the Advanced Vte Diagnostic Procedures, see page 7-22.
	Defective flow valve.	Calibrate the flow valve. See *Chapter 6 - Flow Valve Calibration* for instructions. Perform the Advanced Vte Diagnostic Procedures, see page 7-22.
	Defective turbine.	Perform the Advanced Vte Diagnostic Procedures, see page 7-22.

Symptoms	Possible Causes	What to Do
Delivered flow is high. Delivered flow is low.	High or low side sense line or elbow at patient wye loose or leaking. High or low sense lines are occluded. High or low sense ports in the wye are occluded.	Check high and low pressure sense lines to be sure they are correctly attached and securely seated at both the ventilator and wye ends. Check the luer fitting connections for leaks. Check the elbow connectors at the wye tc be sure they have not loosened or been broken loose. Verify lines are not occluded or pinched. Check the exhalation drive line at both the ventilator and exhalation valve ends. Verify the line is securely seated and not leaking.
	Failed autozero.	Perform an autozero under XDCR ZERO See the *LTV® Series* or *LTV® 800 Ventilator Operator's Manual* for more information.
	VHome setting does not match flow valve.	Correct the VHome setting. See *Chapter - Maintenance & Calibration.*
	Failed calibration.	Recalibrate the vent. See *Chapter 6 - Maintenance & Calibration* for instructions If the problem reoccurs after careful recalibration, a transducer may be drifting excessively. Replace the analog board. See *Chapter 8 - Analog Board Assembly* for instructions.
	Internal flexible tubing occluded or pinched. Internal flexible tubing has pinhole leaks or leaking at connections.	This problem will often be accompanied by **XDCR FAULT** alarms. Open the vent and verify that none of the flexible tubes connected to the Solenoid Manifold or analog board are pinched or leaking. See *Chapter 8 - Solenoid Manifold Assembly or Analog Board Assembly* for a routing diagram.
	Defective flow valve.	Calibrate the flow valve. See *Chapter 6 - Flow Valve Calibration* for instructions. Perform the Advanced Vte Diagnostic Procedures. see page 7-24.
	Defective turbine.	Replace the turbine manifold. See *Chapter 8 - Turbine Manifold* for instructions.

Symptoms	Possible Causes	What to Do
Sensitivity does not appear to be accurate. Ventilator is autocycling.	Circuit leak.	Run a Leak Test and reseat or replace the leaking parts or connections. See *Chapter - Leak Test* for instructions.
	Sense lines are reversed.	The sense lines are not designed to be removed from either the wye or the luer fittings. If the sense lines have been removed and replaced incorrectly, they may not seal correctly when replaced. Replace the patient wye and sense lines with a known good assembly.
	High or low side sense line or elbow at patient wye loose or leaking. High or low sense lines are occluded. High or low sense ports in the wye are occluded.	Check high and low pressure sense lines to be sure they are correctly attached and securely seated at both the ventilator and wye ends. Check the luer fitting connections for leaks. Check the elbow connectors at the wye to be sure they have not loosened or been broken loose. Verify lines are not occluded or pinched. Check the exhalation drive line at both the ventilator and exhalation valve ends. Verify the line is securely seated and not leaking.
	Pressure Control or Pressure Support set below PEEP.	Verify the control values are appropriately set.
	Failed autozero.	Perform an autozero under **XDCR ZERO**. See the *LTV® Series* or *LTV® 800 Ventilator Operator's Manual* for more information.
	Leak Compensation is not on.	Verify that the Leak Compensation extended features option is set to **On** (default setting is off). See the *LTV® Series Ventilator Operator's Manual* for more information.
	Bypass flexible tube pinched. Pinhole leaks in bypass flexible tube.	If the bypass flexible tube is pinched, it can usually be seen pressed against the louver openings in the bottom of the ventilator case. Open the ventilator and remove the Back Panel. Replace the Back Panel being sure to fit the louvers in between the upper and lower loop of the bypass flexible tube before seating the back cover. If the bypass flexible tube is leaking, replace it.
	Failed calibration.	Recalibrate the vent. See *Chapter 6 - Maintenance & Calibration* for instructions. If the problem reoccurs after careful recalibration, a transducer may be drifting excessively. Perform the Advanced Vte Diagnostic Procedures, see page 7-22.

Symptoms	Possible Causes	What to Do
O_2% is high.	O_2 inlet pressure too high when Low O_2 Source selected. O_2 inlet flow too high when Low O_2 Source selected.	Verify the low pressure O_2 inlet has been correctly calculated and set using the Input O_2 Flow Chart (*see Appendix E - Input O2 Flow Chart).* Pulmonetic Systems recommends the use of an O_2 monitor to verify delivered O_2%. Adjust the entrained O_2 flow so the monitored value shows the desired FIO2. (See the *LTV® Series Ventilator Operator's Manual* for information on using the Low O_2 Source and O_2% features.)
	Low O_2 Source incorrectly selected.	Verify that the Low O_2 Source is on when using a low flow, low pressure source and off when using a high pressure source. (See the *LTV® Series Ventilator Operator's Manual* for information on using the Low O_2 Source and O_2% features.)
	Flow Valve output is low.	Perform the Advanced FiO_2 Diagnostic Procedures, see page 7-26.
	Failed calibration.	Recalibrate the vent. See *Chapter 6 - Maintenance & Calibration* for instructions If the problem reoccurs after careful recalibration, a transducer may be drifting excessively. Replace the analog board. See *Chapter 8 - Analog Board Assembly* for instructions.
	Internal flexible tubing occluded or pinched. Internal flexible tubing has pinhole leaks or leaking at connections.	Open the vent and verify that none of the flexible tubes connected to the Solenoid Manifold, analog board, oxygen blender o flow valve are pinched or leaking. See *Chapter 8 - Solenoid Manifold Assembly* or *Analog Board Assembly* for a routing diagram.
	Defective or leaking Solenoid Manifold. Defective solenoid.	Replace the Solenoid Manifold. See *Chapter 8 - Solenoid Manifold Assembly* for instructions.
	Incorrect O_2 blender solenoid output flow.	Perform the Advanced FiO_2 Diagnostic Procedures, see page 7-26.

Symptoms	Possible Causes	What to Do
O_2% is low.	O_2 inlet flow too low when Low O_2 Source selected.	Verify the low pressure O_2 inlet has been correctly calculated and set using the Input O_2 Flow Chart (*see Appendix E - Input O2 Flow Chart).* Pulmonetic Systems recommends the use of an O_2 monitor to verify delivered O_2%. Adjust the entrained O_2 flow so the monitored value shows the desired FIO2. (See the *LTV® Series Ventilator Operator's Manual* for information on using the Low O_2 Source and O_2% features.)
	Rolled or leaking flow valve inlet gasket.	Replace flow valve inlet gasket (see *Chapter 8 - Flow Valve Assembly).*
	Flow Valve output is high.	Perform the Advanced FiO_2 Diagnostic Procedures, see page 7-26.
	Failed calibration.	Recalibrate the vent. See *Chapter 6 - Maintenance & Calibration* for instructions If the problem reoccurs after careful recalibration, a transducer may be drifting excessively. Replace the analog board. See *Chapter 8 - Analog Board Assembly* for instructions.
	Internal flexible tubing occluded or pinched. Internal flexible tubing has pinhole leaks or leaking at connections.	Open the vent and verify that none of the flexible tubes connected to the Solenoid Manifold, analog board, oxygen blender or flow valve are pinched or leaking. See *Chapter 8 - Solenoid Manifold Assembly* or *Analog Board Assembly* for a routing diagram.
	Defective or leaking Solenoid Manifold. Defective solenoid.	Replace the Solenoid Manifold. See *Chapter 8 - Solenoid Manifold Assembly* for instructions.
	Incorrect O_2 blender solenoid output flow.	Perform the Advanced FiO_2 Diagnostic Procedures, see page 7-26.

Symptoms	Possible Causes	What to Do
PEEP not working. PEEP low. PEEP sags during exhalation.	Circuit leak.	The LTV® Series Ventilator does not actively drive the exhalation valve to maintain PEEP. If there is a significant leak, the PEEP will drop over a long exhalation. Run a Leak Test and reseat or replace th leaking parts or connections. See *Chapter 2 - Leak Test* for instructions.
	PEEP spring not installed in exhalation valve. Diaphragm incorrectly seated in exhalation valve. Diaphragm installed backwards.	Open the exhalation valve and remove th diaphragm and spring. Reseat the spring and diaphragm valve and snap the peep valve back in place. See *Chapter 4 - Cleaning the Exhalation Valve* for a diagram of correct exhalation valve assembly.
	Worn PEEP spring.	If necessary, replace the PEEP spring wit a new one.
	High side sense line or elbow at patient wye loose or leaking.	Check high and low pressure sense lines to be sure they are correctly attached anc securely seated at both the ventilator and wye ends. Check the luer fitting connections for leak Check the elbow connectors at the wye tc be sure they have not loosened or been broken loose. Verify lines are not occluded or pinched.
	Failed calibration.	The monitored PEEP can be viewed usin the **RT XDCR DATA** display. (See *Chapter 3 - Real Time Transducer Data* f instructions on using RT data.). If the monitored PEEP is significantly different from the actual PEEP, the calibration may be off or the transducers may not be working correctly Recalibrate the vent. See *Chapter 6 - Maintenance & Calibration* for instructions If the problem reoccurs after careful recalibration, a transducer may be drifting excessively. Perform the Advanced Vte Diagnostic Procedures, see page 7-22.
	Defective analog board.	Perform the Advanced Vte Diagnostic Procedures, see page 7-22.

Symptoms	Possible Causes	What to Do
Delivered and monitored volumes, pressures, and sensitivity are off.	**VHome** setting does not match flow valve.	Correct the VHome setting. See *Chapter - Maintenance & Calibration.*
	Failed calibration.	Recalibrate the vent. See *Chapter 6 - Maintenance & Calibration* for instructions If the problem reoccurs after careful recalibration, a transducer may be drifting excessively. Perform the Advanced Vte Diagnostic Procedures, see page 7-22.
Delivered volume is high	Diaphragm is incorrectly seated in the exhalation valve.	Open the exhalation valve and remove th diaphragm and spring. Reseat the spring and diaphragm valve and snap the peep valve or peepless valve cap back in place See page 4-6 for a diagram of correct exhalation valve assembly.
Ventilator won't trigger at sensitivity setting of 1 lpm.	Patient effort inadequate.	Some very small patients and patients wit very weak inspiratory efforts may not be able to generate a 1 lpm effort.
	Failed autozero.	Perform an autozero under **XDCR ZERO**. See the *LTV® Series* or *LTV® 800 Ventilator Operator's Manual* for more information.
	Leak Compensation is not on.	Verify that the Leak Compensation extended features option is set to **On** (default setting is off). See the *LTV® Series Ventilator Operator's Manual* for more information.
	Failed calibration.	Recalibrate the vent. See *Chapter 6 - Maintenance & Calibration* for instructions If the problem reoccurs after careful recalibration, a transducer may be drifting excessively. Perform the Advanced Vte Diagnostic Procedures, see page 7-22.

Symptoms	Possible Causes	What to Do
Ventilator is autocycling. Sensitivity does not appear to be accurate.	Circuit leak.	Verify the sensitivity is set to an appropriate value. For a high leak environment, the sensitivity may need to be set higher to prevent autocycling. Check for and correct airway circuit leaks Make sure all circuit accessories are properly connected.
	High or low side sense line or elbow at patient wye loose or leaking. High or low sense lines are occluded. High or low sense ports in the wye are occluded.	Check high and low pressure sense lines to be sure they are correctly attached and securely seated at both the ventilator and wye ends. Check the luer fitting connections for leaks. Check the elbow connectors at the wye tc be sure they have not loosened or been broken loose. Verify lines are not occluded or pinched. Check the exhalation drive line at both the ventilator and exhalation valve ends. Verify the line is securely seated and not leaking.
	Pressure Control or Pressure Support set below PEEP	Verify the control values are appropriately set.
	Failed autozero.	Perform an autozero under **XDCR ZERO**. See the *LTV® Series* or *LTV® 800 Ventilator Operator's Manual* for more information.
	Bypass flexible tube pinched. Pinhole leaks in bypass flexible tube.	If the bypass flexible tube is pinched, it can usually be seen pressed against the louver openings in the bottom of the ventilator case. Open the ventilator and remove the Back Panel. Replace the Back Panel being sure to fit the louvers in between the upper and lower loop of the bypass flexible tube before seating the back cover. If the bypass flexible tube is leaking, replace it.
	Failed calibration.	Recalibrate the vent. See *Chapter 6 - Maintenance & Calibration* for instructions If the problem reoccurs after careful recalibration, a transducer may be drifting excessively. Perform the Advanced Vte Diagnostic Procedures, see page 7-22.

Symptoms	Possible Causes	What to Do
Condensation in sense lines.	High or low sense lines are occluded. High or low sense ports in the wye are occluded.	Verify lines are not occluded or pinched and/or clear the lines with a low flow (less than 10 lpm) gas source.
	Defective purge solenoids.	Replace the Solenoid Manifold. See *Chapter 8 - Solenoid Manifold Assembly* for instructions.
Ventilator is on, gas is not delivered and turbine is running.	Defective or disconnected flow valve. Defective turbine.	Using the Vent Maintenance mode **SERV** test, determine if the turbine and flow valv are working correctly by changing the Turbine Speed, Flow, and Step Motor Positions. Verify all turbine and flow valve cables are connected and all flexible tubes connecte to the analog board and Solenoid Manifol are correctly and securely connected. Perform the Advanced Vte Diagnostic Procedures, see page 7-22.
	Defective or disconnected solenoids.	Using the Vent Maintenance mode SOLENOID test, determine if all solenoids are working correctly. Perform the Advanced Vte Diagnostic Procedures, see page 7-22.
Ventilator is on, gas is not delivered and turbine is not running. **RT XDCR DATA** item **TS** shows speeds at or near 0.	Defective or disconnected turbine.	The SERVO test may be used to set the turbine speed explicitly. (See *Chapter 6 - Maintenance & Calibration* for instructions on using the servo test.) The turbine speed can be viewed using the RT XDCR DATA display. (See *Chapter 3 - Real Tim Transducer Data* for instructions on using RT data.) Verify all flow valve and turbine power cables are connected. Verify all flexible tubes connected to the analog board and Solenoid Manifold are correctly and securely connected. Replace the turbine. See *Chapter 8 - Flo Valve Assembly* or *Turbine Manifold* for instructions.
	Defective motor board.	Replace the motor board. See *Chapter 8 - Motor Board Assembly* for instructions.
	Defective power board.	Replace the power board. See *Chapter 8 - Power Board Assembly* for instructions.
Sense line connectors wobble or loose.	Fitting connectors loosened inside ventilator case.	Open the ventilator case and tighten the nuts on the sense line and drive line connectors. See *Chapter 8 - Back Panel* for instructions on opening the ventilator.

Symptoms	Possible Causes	What to Do
Ventilator makes a high pitched noise when in Standby.	Battery charge circuit running.	When the battery charge circuit is running in bulk charge (the Charge Status LED is amber) the ventilator may emit a high pitched sound that some people can hear This is normal.
Ventilator gets excessively hot.	Defective or disconnected fan.	A **HW FAULT** alarm usually accompanies this problem. Fan operation can be checked by looking at it through the fan grill on the side of the vent. If the fan is not operating, open the ventilator and verify that the fan connector is securely connected to the power board. Replace the fan assembly. See *Chapter - Fan Assembly* for instructions.
	Defective power board.	Replace the power board. . See *Chapter 8 - Power Board Assembly* for instructions.
	Defective thermo conductive heat sink pads.	Open the ventilator and inspect the two thermo conductive heat sink pads, one attached to the Back Panel and one between the turbine manifold and the upper weldment. See *Chapter 8 -Thermo Conductive Motor Board Heatsink Pad or Thermo Conductive Turbine Pad* for instructions.
	Patient circuit leaks. Ventilator must run harder to maintain PEEP.	Perform a Leak Test and reseat or replac the leaking parts or connections. See *Chapter 2 -Ventilator Checkout Tests, Leak Test.*
Ventilator does not work with LTM Graphics Monitor.[29]	Communications setting is not set to **MONITOR** mode.	Set communications setting to **MONITOR** mode. See the *LTV® Series Operator's Manual,* P/N 10664, for detailed instructions.
	Ventilator requires upgrades to be compatible with LTM Graphics Monitor.	Check LTM compatibility in the Model Number menu. See the *LTV® Series Operator's Manual,* P/N 10664, for detaile instructions. If the ventilator is not LTM compatible, it will require upgrading to accommodate th LTM Graphics Monitor.
	Defective connections between the LTM Graphics Monitor and the ventilator.	Check the Communications Data Cable connection between the ventilator's communications port and the LTM Graphics Monitor's Data Port. See the *LTM Graphics Monitor Operator's Manual* P/N 11010, for detailed instructions.

[29] LTM ... LTV® 900 ventilator.

Advanced Vte Diagnostic Procedures

If the ventilator Monitored Exhaled Volume (Vte) readout, Delivered Volume to the lung, Target Pressures or Inspired Volumes (LTM only) appear incorrect; perform the following checkout procedures.

- When instructed to replace a subassembly/component that fails any of the following checkout procedures, verify the original problem is resolved once the subassembly/component has been replaced. If the original problem is not resolved, continue through the next Advanced Diagnostic Checkout procedure.

Transducer Null Checkout

Check the null or zero of the transducer for drift as follows:

1) Power up the unit in VENT CHECK and select the XDCR ZERO menu.
2) Record the figures for the Airway Pressure (AP) and Flow Transducer Wide Channel (FDw) (null figures from the time the unit was last calibrated).
3) Perform an autozero by pressing SELECT. It is considered normal if the figures change slightly, however;
   - If the figures for AP change by more than 50, the Airway Pressure Transducer may be faulty and the Analog PCBA should be replaced. See *Chapter 8 - Analog Board Assembly* for instructions.
   - If the figures for FDw change by more than 50, the Flow Sensor Transducer may be faulty and the Analog PCBA should be replaced. See *Chapter 8 - Analog Board Assembly* for instructions.
   - If the figures for AP and FDw change by less than 20, the unit passes this test and the Pneumatic System Checkout tests are to be performed.

Pneumatic System Checkout

Check the pneumatic system as follows:

1) Apply 50 cmH_2O to the high side port, monitor the pressure with a calibrated, independent pressure meter for 1 minute and record any drop in pressure.

   Then apply 50 cmH_2O to the low side port, monitor the pressure with a calibrated, independent pressure meter for 1 minute and record any drop in pressure.
   - If a pressure drop for either the high or the low side port exceeds 1 cmH_2O, check all internal plumbing and the Solenoid Manifold for leaks, replace any damaged tubing or components and repeat the test.
2) Lay the unit with the front panel up, running in Volume mode and set the Breath Rate to 12, Tidal Volume to 500 ml and Inspiration Time to 1.5 seconds. Attach a Test Lung with a compliance of 10ml/cmH_2O and a resistance of 5 cm/L/sec and allow the unit to warm up for one hour.

3) Allow the unit to run for 1 minute and record the displayed Vte (average for 8 consecutive breaths).

   Then stand the unit upright, allow it to run for 1 minute and record the displayed Vte (average for 8 consecutive breaths).

   - If the difference between the two recorded averages is greater than 100 mL, the Bypass Valve may be faulty and the following should be performed:
     - Check the tubing from the Flow Valve to the Turbine Manifold for leaks and replace if damaged or leaking.
     - If the tubing is OK, replace the Turbine Manifold. See *Chapter 8 - Turbine Manifold* for instructions.

Transducer Accuracy Checkout

High target pressures and short inspiration times coupled with fast rise times may be beyond the capacity of the ventilator. For problems with Pressure Support or Pressure Control, first verify the ventilator is functioning properly.

Check ventilator functionality:

1) Set the ventilator up as follows:
   - Attach a Test Lung with a compliance of 10ml/cmH_2O and a resistance of 5 cm/L/sec
   - Set Rise time - Profile 5
   - Set Inspiration Time - 1.0 sec
   - Set Sensitivity - OFF
   - Set Pressure Control Flow Termination - OFF
2) Set Pressure Control to 50 cmH_2O and measure the Peak Inspiration Pressure (PIP) with a calibrated pressure meter.
   - If reading is between 46 to 54 cmH_2O, the unit is functioning properly.
   - If reading is less than 46 cmH_2O or more than 54 cmH_2O, proceed to the next test.

Check transducer accuracy as follows:

Select the RT XDCR DATA menu and verify the accuracy of the following transducers by applying the specified pressures to the applicable port or transducer.

- When/as performed, record the readout for each test and refer to the Transducer Tolerance Variance Table (see page 7-24) for tolerance variance actions to be taken

AP Pressure Support or Pressure Control:

1) Verify the RISE TIME in VENT OP is set to Profile 5.
2) Apply 50 cmH_2O to the high side port and verify the AP readout is within +/- 0.5 cmH_2O of the applied pressure.
3) Disconnect from the ventilator so the connection is open to ambient air. When the display value stabilizes, verify the AP readout is within +/- 0.5 cmH_2O.

FVd Delivered Volume:

1) Apply 15 cmH_2O to the Flow Valve Differential Transducer at the high side port and verify the FVd readout is within +/- 0.5 cmH_2O of the applied pressure.

2) Disconnect the tube from the syringe to the High Pressure Port of the Valve Differential Transducer so the connection is open to ambient air. When the displayed value stabilizes, verify the FVd readout is within +/- 0.5 cmH_2O.

FDw Monitored Volume:

1) Apply 30 cmH_2O to the Flow Differential Transducer at the high side port and verify the FDw readout is within +/- 0.5 cmH_2O of the applied pressure.

2) Disconnect from the ventilator so the connection is open to ambient air. When the display value stabilizes, verify the FDw readout is within +/- 0.5 cmH_2O.

FDb Inspired Volume (LTM Only):

1) Apply 30 cmH_2O to the Flow Differential Transducer at the low side port and verify the FDb readout is within +/- 0.5 cmH_2O of the applied pressure.

2) Disconnect from the ventilator so the connection is open to ambient air. When the display value stabilizes, verify the FDb readout is within +/- 0.5 cmH_2O.

O2 Oxygen Inlet Pressure (O_2% Concentration, FiO_2) (LTV® 1000 Only):

1) Apply 50 PSI to the Oxygen port and verify the readout is +/- 1.0 PSI.

2) Disconnect from the ventilator so the connection is open to ambient air. When the display value stabilizes, verify the readout is +/- 0.5 PSI.

Transducer Tolerance Variance Table (LTV® 1000 Only)**:**

Transducer	Acceptable Transducer Tolerance Range	Recalibrate Transducer if Variance to Tolerance Is;	Replace Analog Board if Variance to Tolerance Is;
AP	+/- 0.5 cmH_2O	>0.5 but < 2.5 cmH_2O	>2.5 cmH_2O
FVd	+/- 0.5 cmH_2O	>0.5 but < 0.75 cmH_2O	>0.75cmH_2O
FDw	+/- 0.5 cmH_2O	>0.5 but < 1.5 cmH_2O	>1.5 cmH_2O
FDb	+/- 0.5 cmH_2O	>0.5 but < 1.5 cmH_2O	>1.5 cmH_2O
O2	+/- 1.0 PSI	>1.0 but < 2.5 PSI	>2.5 PSI

- If Transducer recalibration is indicated, recalibrate that transducer (see *Chapter 6 - Maintenance & Calibration* for instructions) and repeat the test.
- If Analog Board replacement is indicated, replace the Analog PCBA. See *Chapter 8 - Analog Board Assembly* for instructions and repeat the test.
- If the results for the transducers are within tolerance, perform the Flow Valve Accuracy Checkout tests to determine accuracy of the Flow Valve.

Flow Valve Accuracy Checkout

Check Flow Valve accuracy as follows:

1) At the Tidal Volume setting which is giving failing results, press the Tidal Volume button and VCALC xxx LPM will be displayed (this is the calculated peak flow for the set volume). Record this number.

2) Turn the unit off, then on again in VENT MTNCE (3-finger) mode, select VENT MTNCE and perform a STEP TEST.
   - If the unit fails the Step Test, replace the Flow Valve. See *Chapter 8 - Flow Valve Assembly* for instructions.
   - If the unit passes the Step Test, proceed to the next step.

3) Select SERVO, ON and using a calibrated flow meter, measure the output flow in 10-liter increments from 10 lpm to the peak calculated flow.
   - To adjust the set flow rate, see *Chapter 6 - Servo* for instructions.
   - If the peak flow is above 50 lpm, increase the turbine speed to 5000 RPM.
   - If the output flow is not within +/- 10% of the set flow, the Flow Valve may be faulty and should be replaced. See *Chapter 8 - Flow Valve Assembly* for instructions.

Advanced FiO_2 Diagnostic Procedures

Delivery of the correct percentage of oxygen (FiO_2) is dependent on correct calibration of the Oxygen Pressure Transducer, Flow Valve and O_2 Blender. If the FiO_2 appears incorrect, perform the following.

- When instructed to replace a subassembly/component that fails any of the following checkout procedures, verify the original problem is resolved once the subassembly/component has been replaced. If the original problem is not resolved, continue through the next Advanced Diagnostic checkout procedure.

Oxygen Transducer Checkout

Perform a leak test as follows:

1) Apply a switchable 50 PSIG O_2 source to the oxygen inlet with a calibrated pressure meter in circuit.
2) Switch off the O_2 source and monitor the pressure for 1 minute.
   - If the pressure drop is greater than 1 PSI, check the Pisco connector and the thin, high-pressure tubing for damage or leaks and replace any damaged components.

Perform a calibration check as follows:

1) Power the unit up in VENT CHECK and select RT XDCR DATA, O2
2) With 0.0 PSI applied to the inlet, verify the readout is +/- 0.5 PSI.
3) With 50 PSI applied to the inlet, verify the readout is 50 +/- 1.0 PSI.
4) If either step fails, recalibrate the transducer and repeat the test. If the test still fails, the Oxygen Transducer or associated electronics may be faulty and the Analog PCBA should be replaced. See *Chapter 8 - Analog Board Assembly* for instructions.

Flow Valve Checkout

1) In VENT MTNCE, SERVO mode, check the output flow using the settings in the following table (LTV® 1000 only).

Flow and Speed Settings	Acceptable Output Flow Range	Recalibrate Flow Valve if Flow Output Variance is;	Replace Flow Valve Flow Output Varianc is;
10 lpm - 4000 RPM	9.5 to 10.5 lpm	>7.0 but < 9.5 lpm or >10.5 but <13.0 lpm	<7.0 or >13.0
10 lpm - 5000 RPM	9.5 to 10.5 lpm	>7.0 but < 9.5 lpm or >10.5 but <13.0 lpm	<7.0 or >13.0
50 lpm - 4000 RPM	42.5 to 57.5 lpm	>35.0 but < 42.5 lpm or >57.5 but <65.0 lpm	<35.0 or >65.0
90 lpm - 7000 RPM	76.5 to 103.5 lpm	>63.0 but < 76.5 lpm or >103.5 but <117.0 lpm	<63.0 or >117.0

   - If the flow output is out of the acceptable output flow range, perform the following, in the order shown.

2) Check all Flow Valve flexible tubing for leaks or occlusions and replace any damaged components.

3) Recalibrate the Flow Valve Transducer (see *Chapter 6 - Valve Differential Calibration).*

4) If Flow Valve recalibration is indicated, recalibrate the Flow Valve by adjusting the VHOME setting (see *Chapter 6 - Flow Valve Calibration*).

5) If Flow Valve replacement is indicated, see *Chapter 8 - Flow Valve Assembly.*

O_2 Blender Checkout

Verify the O_2 Blender Solenoid output flows, as follows:

1) Remove the O_2 Blender per instructions in *Chapter 8 - O2 Blender Assembly / O2 Inlet Block.*

2) Reconnect the 8-wire connector from the O_2 Blender to the Power Board and the Blender O_2 tube Pisco connector to the O_2 Pressure Transducer on the Analog Board.

3) Connect a calibrated flow meter to the Blender output barb fitting and a 50 psi O_2 source to the Blender O_2 inlet.

4) Set DIP switch # 5 to ON.

5) Power the ventilator On (in VENT MTNCE mode), select SOLENOID and set solenoids # 1 through # 4 to Off.

6) Verify each (of four) solenoid's output flow is 0.0 lpm +/- 0.5 lpm.
   - If any are not within this range, the O_2 Blender is defective and is to be replaced.

7) Select each solenoid individually, set to On and record the output flow.

Solenoid	Range
1	5.79 to 6.01 lpm
2	17.45 to 18.15 lpm
3	46.36 to 48.24 lpm
4	46.36 to 48.24 lpm

   - If the output flows of all solenoids are within the specified range, the O_2 Blender is correctly calibrated.
   - If the output flow of any one of the solenoids is not within the specified range, the O_2 Blender is defective and is to be replaced.

8) Set DIP switch # 5 to Off, power the ventilator Off and reinstall or replace (as applicable) the O_2 Blender per instructions contained in *Chapter 8 - O2 Blender Assembly / O2 Inlet Block.*

Power and Battery Operation

Problem	Possible Causes	What To Do
The ventilator does not power up.	Defective AC source or adapter and depleted internal battery.	Connect the ventilator to a known good A source using a known good AC adapter. Verify the power cord for the adapter is fully seated. Allow the internal battery to charge a minimum of 8 hours.
	Memory board JP3 connector jumper not installed or not properly installed.	Install or reposition the Memory board JP connector jumper. See *Chapter 8 - Memory Board* for instructions.
	Defective memory board.	Reseat or replace the memory board. Se *Chapter 8 - Memory Board* for instruction
	Defective power board.	Replace the power board. See *Chapter 8 Power Board Assembly* for instructions.
	Defective main board.	Replace the power board. See *Chapter 8 Main Board Assembly* for instructions.
Vent Inop LED is on and ventilator is not ventilating.	Vent in Standby.	After the vent has been turned off and the external power is reconnected, the Vent Inop LED is lit. This is normal. Press On Standby button to turn ventilator on.
	Ventilator was running on internal battery and battery became depleted.	Connect ventilator to good external power source.
	Vent Inop.	Power up the vent and check the **EVENT TRACE** for events indicating the reason f inop. See the *LTV® Series* or *LTV® 800 Ventilator Operator's Manual* for information on reading the event trace.
	Memory board JP3 connector jumper not installed or not properly installed.	Install or reposition the Memory board JP connector jumper. See *Chapter 8 - Memory Board* for instructions.
	Defective memory board.	Reseat or replace the memory board. Se *Chapter 8 - Memory Board* for instruction
	Defective power board.	Replace the power board. See *Chapter 8 Power Board Assembly* for instructions.
	Defective main board.	Replace the main board. See *Chapter 8 Main Board Assembly* for instructions.

Problem	Possible Causes	What To Do
The ventilator doesn't operate from external power.	Defective AC source. AC adapter power cord loose.	Make sure the AC adapter is plugged intc a good AC source and is securely connected to the ventilator. Verify the power cord for the adapter is fully seated.
	Defective AC adapter.	Replace the AC adapter.
	Blown power board fuse.	Replace the power board fuse. See *Chapter 8 - Power Board Fuse* for instructions.
	Defective power board.	Replace the power board. See *Chapter 8 Power Board Assembly* for instructions.
The ventilator does not operate from internal battery. The ventilator shuts off when external power is removed.	Internal battery depleted.	If the internal battery is depleted, charge the internal battery for 24 hours by connecting the external AC adapter and plugging it into a good AC source.
	Internal battery not connected.	If the internal battery is not connected, the Charge Status LED will show red. Reconnect the internal battery. See *Chapter 8 - Internal Battery Pack* for instructions.
	Defective internal battery.	If the battery does not reach full capacity after several charge cycles (vent should run for more than ½ hour on nominal settings) replace the internal battery. See *Chapter 8 - Internal Battery Pack* for instructions.
	Defective power board.	If the battery won't charge completely afte replacing it, there may be a problem with the charge circuit on the power board. Replace the power board. See *Chapter 8 Power Board Assembly* for instructions.
Battery doesn't reach full charge. Battery depletes too quickly.	Internal battery deeply discharged.	Charge the internal battery for 24 hours b connecting the external AC adapter and plugging it into a good AC source. If the battery is deeply discharged, it may take several cycles of charging and dischargin for the battery to reach a maximum charg
	Defective internal battery.	If the battery does not reach full capacity after several charge cycles (vent should run for more than ½ hour on nominal settings) replace the internal battery. See *Chapter 8 - Internal Battery Pack* for instructions.

Problem	Possible Causes	What To Do
CONTINUED ... *Battery doesn't reach full charge.* *Battery depletes too quickly.*	Defective power board.	If the battery won't charge completely afte replacing it, there may be a problem with the charge circuit on the power board. Replace the power board. See *Chapter 8 Power Board Assembly* for instructions.
Battery Charge Status LED is flashing amber.	Internal battery charging.	The Charge Status LED flashes amber while the battery charging circuit evaluates the battery as a part of the charge cycle. the battery is found to be OK, the Charge Status LED will change to solid amber while the battery is charging. The internal battery charges any time the ventilator is connected to an external power source. I the battery is deeply discharged, the Charge Status LED may flash amber for u to an hour.
	Defective internal battery.	If the battery does not reach full capacity after several charge cycles (vent should run for more than ½ hour on nominal settings) replace the internal battery. See *Chapter 8 - Internal Battery Pack* for instructions.
	Defective power board.	If the battery won't charge completely afte replacing it, there may be a problem with the charge circuit on the power board. Replace the power board. See *Chapter 8 Power Board Assembly* for instructions.
Battery Charge Status LED is flashing red.	Defective power board.	Replace the power board. See *Chapter 8 Power Board Assembly* for instructions.
Battery Charge Status LED is solid red.	Internal battery not connected.	If the internal battery is not connected, the Charge Status LED will show red. Reconnect the internal battery. See *Chapter 8 - Internal Battery Pack* for instructions.
	Defective internal battery.	Replace the internal battery. See *Chapter 8 - Internal Battery Pack* for instructions.
	Defective power board.	Replace the power board. See *Chapter 8 Power Board Assembly* for instructions.

Alarms

Many alarms such as **HIGH PRES** or **LOW O2 PRES** can occur during normal operation. Information on addressing alarms is covered in the *LTV® Series* or *LTV® 800 Ventilator Operator's Manual*. Single occurrences of some alarms, such as **HW FAULT** or **RESET** may be caused by ESD. If these alarms reoccur, and for other alarms that do not usually occur during normal operation, follow the instructions in this section or contact Pulmonetic Systems.

Symptoms	Possible Causes	What to Do
HIGH PRES occurred but alarm did not sound.	Alarm silence was already active (Silence/Reset LED is red).	The ventilator alarms can be silenced for 60 seconds by pressing the Silence Rese button. If the alarm is already silenced (Silence/Reset LED is red), it will not sound again until the silence period expires.
	Alarm automatically silenced after 3 seconds because condition cleared.	When an alarm occurs, the audible alarm sound for a minimum of 3 seconds or for as long as the condition exists. Some alarms, such as **HIGH PRES** may clear almost immediately and the alarm will sound for only 3 seconds.
	High pressure alarm delay is on - **HP DELAY** is set to **DELAY 1 BRTH** or **DELAY 2 BRTH**.	When a high pressure condition is detected, the **HIGH PRES** message is displayed and the High Pres Limit control is flashed. If the **HP DELAY** option is set to **NO DELAY**, the audible alarm is sounded immediately. When the **HP DELAY** option is set to **DELAY 1 BRTH** or **DELAY 2 BRTH**, the audible is not sounded until the second or third consecutive breath with a high pressure condition. (See the *LTV® Series* or *LTV® 800 Ventilator Operator's Manua* for an explanation of this feature.)
Alarm doesn't sound.	Ventilator did not run for more than 1 minute.	Turn the ventilator on and run for a minimum of 1 minute to charge the alarm capacitor.
	Defective or disconnected Sounder.	Run an alarm test. See *Chapter 2 - Alarm Test* for instructions. If the alarm does not sound, open the ventilator and verify that the alarm Sounder connector is securely connected to the power board. Replace the alarm sounder. See *Chapte 8 - Alarm Sounder Assembly* for instructions.
	Defective power board.	Replace the power board. See *Chapter 8 - Power Board Assembly* for instructions.

Symptoms	Possible Causes	What to Do
Ventilator won't exhale. repeated **HIGH PRES** alarms, turbine stops and pressure drops, then autocycles up to **HIGH PRES** again.	Diaphragm installed backwards or incorrectly seated in exhalation valve.	Open the exhalation valve and remove th diaphragm and spring. Reseat the spring and diaphragm valve and snap the peep valve or peepless valve cap back in place See *Chapter 4 - Cleaning the Exhalation Valve* for a diagram of correct exhalation valve assembly.
	Sense lines occluded, pinched or reversed.	Check high and low pressure sense lines to be sure they are correctly attached and securely seated at both the ventilator and wye ends. Verify lines are not occluded. pinched or reversed.
	Internal flexible tubing occluded or pinched. Internal flexible tubing has pinhole leaks or leaking at connections.	This problem will often be accompanied by **XDCR FAULT** alarms. Open the vent and verify that none of the flexible tubes connected to the Solenoid Manifold or analog board are pinched or leaking. See *Chapter 8 - Solenoid Manifold Assembly* or *Analog Board Assembly* for a routing diagram.
	Defective exhalation drive solenoid.	Replace the Solenoid Manifold. See *Chapter 8 - Solenoid Manifold Assembly* for instructions.
Repeated **DISC/SENSE** alarms.	Circuit disconnected from patient, wye or vent. Exhalation valve disconnected from wye. PEEP valve or peepless cap disconnected from wye.	Check the circuit and exhalation valve to verify the circuit is securely connected anc the valve is intact. Open the exhalation valve and remove the diaphragm and spring. Reseat the spring and diaphragm valve and snap the peep valve or peeples valve cap back in place. See *Chapter 4 - Cleaning the Exhalation Valve* for a diagram of correct exhalation valve assy.
	High or low side sense lines disconnected from vent or wye or are inappropriately attached. High or low side sense line or elbow at patient wye loose or leaking. High or low sense lines are occluded. High or low sense ports in the wye are occluded.	Check high and low pressure sense lines to be sure they are correctly attached and securely seated at both the ventilator and wye ends. Check the luer fitting connections for leaks. Check the elbow connectors at the wye to be sure they have not loosened or been broken loose. Verify lines are not occluded. pinched or reversed Check the exhalation drive line at both the ventilator and exhalation valve ends. Verify the line is securely seated and not leaking.

Symptoms	Possible Causes	What to Do
CONTINUED ... *Repeated* ***DISC/SENSE*** *alarms.*	Exhalation drive line leaking or loose. Exhalation valve leaking during inspiration.	Check the exhalation drive line at both the ventilator and exhalation valve ends. Verify the line is securely seated and not leaking. Verify the exhalation valve is not leaking during inspiration. If it is leaking, open the exhalation valve and remove the diaphragm and spring. Reseat the spring and diaphragm valve and snap the peep valve back in place. See *Chapter 4 - Cleaning the Exhalation Valve* for a diagram of correct exhalation valve assembly. If necessary, replace the exhalation diaphragm, PEEP spring or exhalation valve with a new one.
	Pressure Control or Pressure Support set below PEEP.	Verify the control values are appropriately set.
	Internal flexible tubing occluded or pinched. Internal flexible tubing has pinhole leaks or leaking at connections.	This problem will often be accompanied b **XDCR FAULT** alarms. Open the vent and verify that none of the flexible tubes connected to the Solenoid Manifold or analog board are pinched or leaking. See *Chapter 8 - Solenoid Manifold Assembly* c *Analog Board Assembly* for a routing diagram.
	Defective transducer on analog board.	Replace the analog board. See *Chapter 8 - Analog Board Assembly* for instructions.
	Defective autozero solenoid.	Replace the Solenoid Manifold. See *Chapter 8 - Solenoid Manifold Assembly* for instructions.
Repeated **XDCR FAULT** alarms.	Internal flexible tubing occluded or pinched. Internal flexible tubing has pinhole leaks or leaking at connections.	This problem will often be accompanied b **XDCR FAULT** alarms. Open the vent and verify that none of the flexible tubes connected to the Solenoid Manifold or analog board are pinched or leaking. See *Chapter 8 - Solenoid Manifold Assembly* c *Analog Board Assembly* for a routing diagram.
	Defective transducer on analog board.	Replace the analog board. See *Chapter 8 - Analog Board Assembly* for instructions.
	Defective autozero solenoid.	Replace the Solenoid Manifold. See *Chapter 8 - Solenoid Manifold Assembly* for instructions.

Symptoms	Possible Causes	What to Do
HW FAULT alarm.	**HW FAULT** alarms: **AD MMTCH** **AD MTCH1** **EEPROM** **FAN FLT1** **HOME ER1** **INTRRPT1** **INTRRPT2** **SYNC ER1**	Check the Event Trace to determine the kind of error and follow the instructions below for the specific error type. (See *the LTV® Series* or *LTV® 800 Ventilator Operator's Manual* for instructions on usir the event trace.)
Repeated **HW FAULT** alarms. delivered pressures and volumes are off. Event Log shows **SYNC ER1** or **HOME ER1**.	Defective or disconnected flow valve.	The SERVO test may be used to set the valve step position explicitly. See *Chapte 6 - Maintenance & Calibration* for instructions on using the servo test. The step position can be viewed using the RT XDCR DATA display. (See *Chapter 3 - Real Time Transducer Data* for instructior on using RT data.) If the flow valve does not respond to the SERVO controls, open the ventilator and verify that the flow valve connectors are securely connected to the motor and power boards. Replace the flow valve. See *Chapter 8 - Flow Valve Assembly* for instructions.
	Defective motor board.	Replace the motor board. See *Chapter 8 Motor Board Assembly* for instructions.
	Defective power board.	Replace the power board. . See *Chapter - Power Board Assembly* for instructions.
Repeated **HW FAULT** alarms, fan not turning. ventilator gets excessively hot. Event Log shows **FAN FLT1**.	Defective or disconnected fan. Fan housing screws over-tight.	Fan operation can be checked by looking at it through the fan grill on the side of the vent. If the fan is not operating, open the ventilator and verify that the fan connecto is securely connected to the power board. Verify that the fan is mounted flush to the case and the fan wiring is not pinched between the fan and case. If the fan wirin is pinched, it may operate correctly with the ventilator case open but fail when the ventilator Back Panel is tightened down. Verify that the fan housing screws have n been over tightened. If the screws are toc tight, the housing may be warped and the fan may not turn or may turn too slowly. If the fan wiring has been pinched, or the fan does not operate, replace the fan assembly. See *Chapter 8 - Fan Assembl* for instructions.
	Defective power board.	Replace the power board. . See *Chapter 8 - Power Board Assembly* for instructions.

Symptoms	Possible Causes	What to Do
Repeated **HW FAULT** alarms. Event Log shows **EEPROM**.	Electro static discharge (ESD).	Clear the alarm. Reduce static causing conditions in the operating environment.
	Defective main board.	Replace the main board. See *Chapter 8 Main Board Assembly* for instructions.
Repeated **HW FAULT** alarms. Event Log shows **INTRRPT1** or **INTRRPT2**.	Electro static discharge (ESD).	Clear the alarm. Reduce static causing conditions in the operating environment.
	Defective main board.	Replace the main board. See *Chapter 8 Main Board Assembly* for instructions.
RESET alarm. **RESET** alarm occurs at the conclusion of POST after performing the Watchdog test, Battery Duration test, or any other test which causes the ventilator to go inoperative; other than pressing and holding the On/Standby button. Event Log shows **LN VENT1**	Software version 3.13 or higher installed.	This is a normal feature on ventilators wit software version 3.13 or higher installed. Press the Silence/Reset button twice to clear the alarm
RESET alarm. Repeated **RESET** alarms. Event Log shows **CRC, STACK, POST,** or **RUNAWAY**.	**RESET** alarms: **CRC** **POST** **RUNAWAY** **STACK**	Check the Event Trace to determine the kind of error. (See *the LTV® Series* or *LTV® 800 Ventilator Operator's Manual* fc instructions on using the event trace.)
	Electro static discharge (ESD).	Clear the alarm. Reduce static causing conditions in the operating environment.
	Defective memory board.	Replace the memory board. See *Chapte 8 - Memory Board* for instructions.
	Defective main board.	Replace the main board. See *Chapter 8 Main Board Assembly* for instructions.
	All other causes.	Contact Pulmonetic Systems.
NO CAL DATA alarm. **NO CAL** displayed in place of monitored values. Event Log shows **NO CAL**.	Failed or missing calibration records.	Recalibrate the vent. See *Chapter 6 - Maintenance & Calibration* for instructions If the problem reoccurs after careful recalibration, a transducer may be drifting excessively. Replace the analog board. See *Chapter 8 - Analog Board Assembly* for instructions.

Symptoms	Possible Causes	What to Do
DEFAULTS alarm. Event Log shows **DEFAULTS**.	Electro static discharge (ESD).	Some or all control settings were found to be invalid or out of range on power up and were restored to the default settings. Clear the alarm. Reduce static causing conditions in the operating environment.
	Defective main board.	Replace the main board. See *Chapter 8 - Main Board Assembly* for instructions.
	Defective memory board.	Replace the memory board. See *Chapter 8 - Memory Board* for instructions.

Checkout Test Failures

Symptoms	Possible Causes	What to Do
ALARM Test Audible alarm too loud.	Alarm volume set too high.	Set the alarm volume under the Extendec Features Menu. (See the *LTV® Series* or *LTV® 800 Ventilator Operator's Manual* fo an explanation of the **ALARM VOL** feature.)
ALARM Test Audible alarm too soft.	Alarm volume set too low.	Set the alarm volume under the Extendec Features Menu. (See the *LTV® Series* or *LTV® 800 Ventilator Operator's Manual* fo an explanation of the **ALARM VOL** feature.)
	Defective alarm sounder.	Replace the alarm sounder. See *Chapte 8 - Alarm Sounder Assembly* for instructions.
	Alarm sounder blocked.	Check the alarm sounder opening in the right side of the ventilator to verify the opening is not blocked.
ALARM Test Alarm does not sound.	Alarm sounder blocked.	Check the alarm sounder opening in the right side of the ventilator to verify the opening is not blocked.
	Alarm sounder disconnected.	Open the back of the ventilator and verify the alarm sounder is properly connected. See *Chapter 8 - Alarm Sounder Assembl* for instructions.
	Defective alarm sounder.	Replace the alarm sounder. See *Chapte 8 - Alarm Sounder Assembly* for instructions.
	Defective power board.	Replace the power board. See *Chapter 8 Power Board Assembly* for instructions.
Alarm Test Confirming audible chirp does not sound[30].	Ventilator does not have Power Board P/N 15000 installed.	This is normal. Ventilators that do not have Power Board P/N 15000 installed do not have the confirming audible chirp feature.
	Audible alarm did not sound long enough before test was terminated.	Repeat the Alarm Test and allow audible alarm to sound for at least 2 seconds before pushing the Select button.
	Defective power board.	Replace the power board. (See *Chapter 8 Power Board Assembly*)

[30] Only applicable on ventilators with Power Board P/N 15000 installed (as indicated by an audio sound

Symptoms	Possible Causes	What to Do
DISPLAY Test A display or LED does not illuminate.	Misaligned LED.	If displays are operating but misaligned, remove the main board and realign the LEDs or displays. See *Chapter 8 - Main Board Assembly* for instructions.
	Defective LED or display. Defective main board.	If a display is not operating during the display test, replace the main board. See *Chapter 8 - Main Board Assembly* for instructions.
CONTROL Test Message is not displayed when Volume / Pressure Mode button, Pressure Control button, O_2% button, or Low Pressure O_2 Source button is pressed.	Wrong model selected in maintenance mode.	Verify the correct **MODEL** has been selected in **VENT MTNCE**. See *Chapter - Maintenance & Calibration.*
CONTROL Test Correct message is not displayed when rotary switch is turned, or incorrect message is displayed.	Rotary switch is disconnected. Defective rotary switch.	Verify the rotary switch is properly connected. If necessary, replace the rotary switch assembly. See *Chapter 8 - Rotary Knob Assembly* fc instructions.
	Defective main board.	Replace the main board. See *Chapter 8 - Main Board Assembly* for instructions.
CONTROL Test The name of a button control is not displayed when the control is pressed or an incorrect control name is displayed.	Front panel ribbon cable not properly connected.	Remove the power board to access the ribbon cable connection on the main board. Disconnect and reconnect the fror panel ribbon cable connector. See *Chapter 8 - Main Board Assembly* for instructions. Handle the ribbon cable carefully to avoid scratching or damaging it.
	Front panel ribbon cable damaged. Defective switch.	Replace the front panel. See *Chapter 8 - Front Panel* for instructions
	Defective main board.	Replace the main board. See *Chapter 8 - Main Board Assembly* for instructions.
LEAK Test Leak test fails.	Circuit connections or accessories are leaking. Wye is not properly capped.	Reseat or replace the leaking circuit parts accessories or connections. Verify the wye is securely capped. See *Chapter 2 - Leak Test* for instructions.

Symptoms	Possible Causes	What to Do
CONTINUED ... *Leak test fails.*	Internal flexible tubing occluded or pinched. Internal flexible tubing has pinhole leaks or leaking at connections.	This problem will often be accompanied b **XDCR FAULT**. Open the vent and verify that none of the flexible tubes connected the Solenoid Manifold or analog board are pinched or leaking. See *Chapter 8 - Solenoid Manifold Assembly or Analog Board Assembly* for a routing diagram.
	Over pressure relief valve leaking. Subambient relief valve leaking. Flow valve leaking.	Replace the flow valve. See *Chapter 8 - Flow Valve Assembly* for instructions.
	VHome setting does not match flow valve.	Correct the VHome setting. See *Chapter - Maintenance & Calibration.*
LEAK Test Leak test fails with **LEAK --- FAIL** message.	Internal problem with the turbine.	Verify wiring to turbine. Replace turbine manifold or motor PCBA.
Vent Inop Alarm Test Audible alarm too soft.	Alarm sounder blocked.	Check the alarm sounder opening in the right side of the ventilator to verify the opening is not blocked.
Vent Inop Alarm Test Alarm does not sound.	Alarm sounder blocked.	Check the alarm sounder opening in the right side of the ventilator to verify the opening is not blocked.
	Sounder fails to sound.	Replace Sounder. (See *Chapter 8 - Powe Board Assembly*)
	Power PCBA does not drive sounder.	Replace Power PCBA. (See *Chapter 8 - Power Board Assembly*)
Vent Inop Alarm Test LED portion of Vent Inop Alarm test fails.	Inop LED fails to illuminate.	Replace Main PCBA. (See *Chapter 8 - Main Board Assembly*)
	Power PCBA does not drive Inop LED.	Replace Power PCBA. (See *Chapter 8 - Power Board Assembly*)
Vent Inop Alarm Test Vent Inop alarm audible tone and/or LED did not last 15 seconds (fail).	Power PCBA is defective.	Replace Power PCBA. (See *Chapter 8 - Power Board Assembly*)
Vent Inop Alarm Test Vent Inop alarm audible tone and/or LED fails test.	Unknown	Discontinue use of the ventilator and contact Pulmonetic Systems for information.

Symptoms	Possible Causes	What to Do
Vent Inop Alarm Test Confirming audible chirp does not sound[31].	Ventilator does not have Power Board P/N 15000 installed.	This is normal. Ventilators that do not have Power Board P/N 15000 installed do not have the confirming audible chirp feature.
	Audible alarm did not sound long enough before test was terminated.	Repeat the Vent Inop Alarm Test and allo audible alarm to sound for at least 15 seconds before pushing the Silence/Rese button. (See *Chapter 2 - Vent Inop Alarm Test*)
	Defective power board.	Replace the power board. (See *Chapter 8 Power Board Assembly*)
WDOG Test Vent does not reset when watchdog test is performed.	Early version of software.	In the initial LTV® Series Ventilator software versions, the ventilator goes to a Inop state instead of performing a reset. This is normal. Clear the reset alarm by pressing Silence/Reset and resume operation by pressing the On/Standby button. The vent will perform the POST tests and resume operation in the vent maintenance mode.
	Defective main board.	Replace the main board. See *Chapter 8 - Main Board Assembly* for instructions.

[31] Only applicable on ventilators with Power Board P/N 15000 installed (as indicated by an audio sound symbol ( ) on the back panel label)

Test Lung Operation

Symptoms	Possible Causes	What to Do
Delivered pressure higher than set pressure on test lung.	Pressure> 40 cmH_2O used on small test lung (Pulmonetic Systems or Siemens 190.)	The compliance characteristics of some small test lungs (Pulmonetic Systems or Siemens 190) cause incorrect readings when high pressures are used. For these lungs, use pressures under 40 cmH_2O or change to a larger lung.
Monitored volumes very high on test lung.	Test lung with small aperture connected directly to wye.	Some test lungs have a narrow opening c a restrictor which may cause jetting and cause the flow differential to be read incorrectly. To reduce the jetting effect, add a short extension between the test lung and the wye if clinically advisable.
	Very small ET tube connected directly to wye.	A very small ET tube connected directly t the wye may cause jetting and cause the flow differential to be read incorrectly. To reduce the jetting effect, add a short large bore extension between the ET tube and the wye if clinically advisable.

Chapter 8 - COMPONENT REMOVAL AND REPLACEMENT

This section contains detailed procedures for the removal and replacement of all major components of the LTV© Series Ventilator.

Caution !

Electronic and Mechanical Parts - The LTV© Series Ventilator contains delicate electronic and mechanical parts that must be handled properly to avoid damage. Follow the instructions carefully and make sure to observe all instructions.

Anti-static Precautions - Always wear a grounded anti-static wrist strap when handling the ventilator with the case open. Electrostatic discharge can damage the internal electronics.

Training and Authorization

This manual is intended for use by Pulmonetic Systems trained and authorized service personnel. Do not perform any of the procedures in this manual unless you are trained and authorized for service on the LTV© Series Ventilator.

Service Record

Any time service is performed on the LTV© Series Ventilator, a Service Record form should be filled out and returned to Pulmonetic Systems. This allows for complete tracking of replacement part lots and allows Pulmonetic Systems to maintain comprehensive service history records.

A Service Record form should be filled out for all types of service, including part replacement and calibration. A blank Service Record form can be found in *Appendix C - Service Record.*

Tools

A list of the tools required to remove and replace various components contained within the LTV® ventilators is located at the beginning of the removal/replacement instructions for each of the particular components to be serviced. For a complete list of tools required to perform all Maintenance and Calibration processes or Component Removal and Replacement procedures, see *Appendix E - Reference Information, Tools, Required*, page E-13.

Calling for Assistance

If a problem occurs while maintaining the LTV® Series Ventilator or if you require additional information, contact a certified Pulmonetic Systems service technician or Pulmonetic Systems, Inc. at:

Pulmonetic Systems, Inc.

17400 Medina Rd., Suite 100
Minneapolis, Minnesota 55447-1341

Phone:	(763) 398-8500
Office Fax:	(763) 398-8400
Customer Care Center Phone:	(800) 754-1914, ext. 2
Customer Care Center Fax:	(763) 398-8403
Sales/Marketing E-mail:	info@pulmonetic.com
Customer Care Center E-mail:	service@pulmonetic.com
Pulmonetic Systems Website:	http://www.pulmonetic.com

Before Removing the Back Panel

The following cautions should be followed when performing any maintenance or service procedures on the ventilator:

> *Caution !*
>
> **Opening the Ventilator** - Always turn the ventilator **OFF** and remove the external power before opening the ventilator case or attempting to service the ventilator.
>
> **Anti-static Precautions** - Always wear a grounded anti-static wrist strap when handling the ventilator with the case open. Electrostatic discharge can damage the internal electronics.

> *Note*
>
> To ensure the advantage of all new features and reliability improvements, Pulmonetic Systems requires that the LTV® ventilator's operating software be at, or higher than, version 3.11 when performing any Maintenance and Calibration processes or Component Removal and Replacement procedures. To upgrade the ventilator's operating software, see *Chapter 8 - Component Removal and Replacement, Memory Board*, page 8-63.

Before Replacing the Back Panel

Several checks should be made before reattaching the Back Panel. Follow the guidelines listed under *Back Panel, Reinstallation* on page 8-27.

After Performing Any Maintenance

After performing maintenance on the LTV® Series Ventilator, a set of checkout tests should be run. Some maintenance procedures also require the LTV® Series Ventilator be partially or completely recalibrated.

> *Caution !*
>
> **Verification of Operation** - After opening the ventilator and performing any maintenance, verify proper operation of the ventilator by performing the checks and calibrations recommended in *Chapter 9 - Final Checkout Test.*

Boots, Protective

Rubberized protective boots are installed on the top and bottom of all current versions of LTV® ventilators to protect them from accidental shocks and strikes to the casing.

This section is divided into four sub-sections to accommodate the removal, replacement, or installation of the boots under the following conditions:

- Boots, Temporary Removal (to allow removal of the Back Panel)
- Boots, Permanent Removal (permanently remove the boots)
- Boots, Reinstallation (reinstall boots after ventilator maintenance)
- Boots, Installation (boots not previously installed)

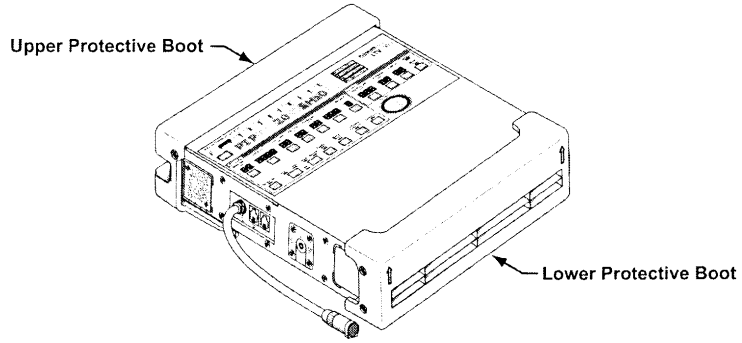

WARNING !

Mounting Screw Use – Internal damage to the ventilator may result if the wrong length mounting screws are used when installing or removing external accessories.

Accessories Mounting Screws - Refer to the information contained in Pulmonetic Systems Replacement Screws Kit, P/N 11149, to determine the appropriate accessories mounting screws or accessories replacement screws location, type and length to use when removing or exchanging external accessories on an LTV® Series Ventilator.

Boots, Temporary Removal

Parts Required for Replacement:	Tools Required:
• None **Replace if damaged:** • Finish Washers (6) P/N 10191[32]	• Phillips / cross tip screwdriver with torque meter

To temporarily remove the Upper Protective Boot[33]:

2) Carefully place and support the disconnected ventilator in an upright position on a clean, dry surface.

3) **Prior to removing the mounting screws**, make note of where the screw is locatec in the leg of the Upper Boot (see *illustration* below).
   - On earlier version ventilators, the screw will be in the upper hole and in the lower hole of the leg for current version ventilators.

4) Using a Philips-head screwdriver, remove the two flat-head mounting screws and finish washers in the legs of the Upper Boot and the two flat-head mounting screws and finish washers in the sides of the Upper Boot, as indicated in the illustration.
   - Retain the screws and finish washers for reuse when the Upper Boot is reinstalled.

5) Remove the Upper Boot.

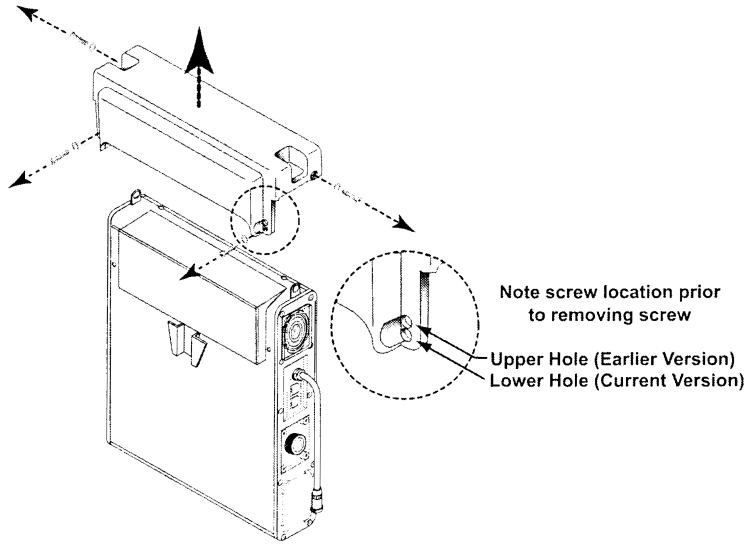

[32] Contained in Pulmonetic Systems Replacement Screws kit, P/N 11149.

[33] *See Appendix E - Reference Information, External Accessories Screw Location, Type and Length* for

To temporarily remove the Lower Protective Boot[34]:

1) Lay the ventilator down (front up) and use a Philips-head screwdriver to remove the four flat-head mounting screws and finish washers in the sides of the Lower Protective Boot, as indicated in the illustration below.
   - Retain the screws and finish washers for reuse when the Lower Boot is reinstalled.
2) Remove the Lower Boot.

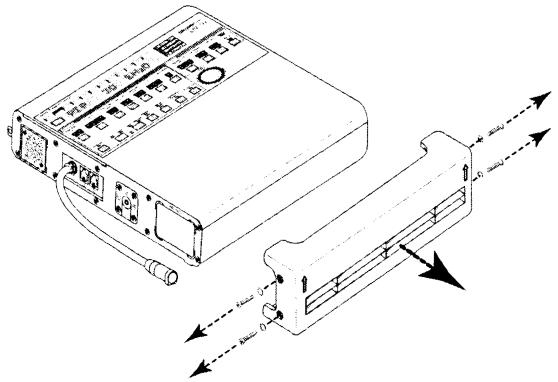

[34] *See Appendix E - Reference Information, External Accessories Screw Location, Type and Length* for

Boots, Permanent Removal

Parts Required for Replacement:	Tools Required:
• Replacement Screws Kit, 11149 **Replace if damaged:** • Finish Washers (6) P/N 10191[35]	• Phillips / cross tip screwdriver with torque meter

To permanently remove the Upper Protective Boot[36]:

1) Carefully place and support the disconnected ventilator in an upright position on a clean, dry surface.
2) **Prior to removing the mounting screws**, make note of where the screw is located in the leg of the Upper Boot (see *illustration* on the next page).
   - On earlier version ventilators, the screw will be in the upper hole and in the lower hole of the leg for current version ventilators.
3) Using a Philips-head screwdriver, remove the two flat-head mounting screws and finish washers in the legs of the Upper Boot and the two flat-head mounting screws and finish washers in the sides of the Upper Boot, as indicated in the illustration on the next page.
4) Remove the Upper Boot and insert and thread two pan-head mounting screws into the screw holes in the ventilator's Back Panel, as indicated in the illustration on the next page.

> ***WARNING !***
>
> **Specific Boot Replacement Screw Location -** One leg of the Upper Protective Boot has an additional screw hole (furthest from the end of the leg);
> - On earlier version ventilators (screw was located in the upper hole in the leg of the boot) the use of a 3/16" mounting screw is required.
> - On current version ventilators (screw was located in the lower hole in the leg of the boot) the use of a 1/4" mounting screw is required.

---

[35] Contained in Pulmonetic Systems Replacement Screws kit, P/N 11149.

[36] *See Appendix F - Reference Information, External Accessories Screw Location, Type and Length* for

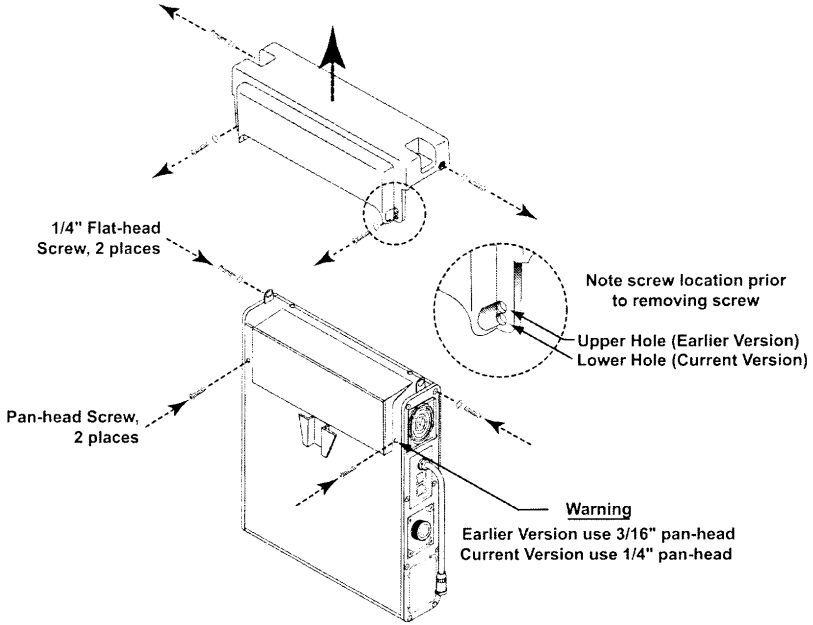

5) Insert and thread two 1/4" flat-head mounting screws with finish washers into the screw holes in the ventilator's side panels, as indicated in the illustration.
   - Finish washers should be already in place.
6) Torque tighten the mounting screws to these specified values (**Caution**: Do not over tighten to avoid damage to the finish washers).
   - Torque tighten the screws in the Back Panel of the ventilator to **60 in-oz** (0.42 Nm)
   - Torque tighten the two screws in the sides of the ventilator to **20 in-oz** (0.14 Nm)

To permanently remove the Lower Protective Boot[37]:

1) Lay the ventilator down (front up) and use a Philips-head screwdriver to remove the four flat-head mounting screws and finish washers in the sides of the Lower Protective Boot, as indicated in the illustration below.
2) Remove the Lower Boot and insert and thread four 1/4" flat-head mounting screws with finish washers into the screw holes in the ventilator's side panels, as indicated in the illustration below.
   - Finish washers should be already in place.
3) Torque tighten all four screws to **20 in-oz** (0.14 Nm) (**Caution**: Do not over tighten to avoid damage to the finish washers).

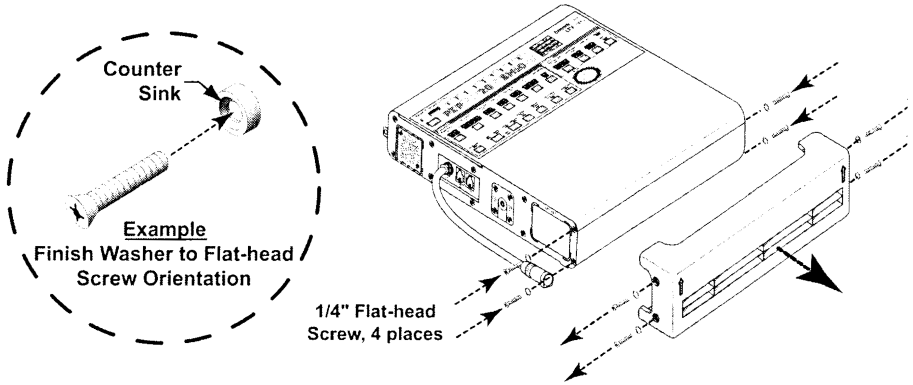

[37] *See Appendix F - Reference Information, External Accessories Screw Location, Type and Length* for

Boots, Reinstallation

Parts Required for Replacement:	Tools Required:
• Replacement Screws Kit, 11149 **Replace if damaged:** • Finish Washers (6) P/N 10191[38]	• Phillips / cross tip screwdriver with torque meter

To reinstall the Upper Protective Boot[39]:

1) Carefully place and support the disconnected ventilator in an upright position on a clean, dry surface.
2) Orient the Upper Protective Boot over the ventilator as shown in the illustration on the next page. Move the boot down into position on the top of the ventilator and align its four screw holes with the corresponding holes in the ventilator back and side panels.
3) Insert and thread two 7/16" flat-head mounting screws with finish washers through the screw holes in the sides of the Upper Boot, as indicated in the illustration on the next page.
4) Insert and thread two flat-head mounting screws with finish washers through the screw holes in the legs of the Upper Boot, as indicated in the illustration on the next page.

WARNING !

Specific Boot Installation Screw Location - One leg of the Upper Protective Boot has an additional screw hole (furthest from the end of the leg);

- On earlier version ventilators, the screw hole will align with the upper hole in the boot and requires the use of the 1/4" mounting screw.
- On current version ventilators, the screw hole will align with the lower hole in the boot and requires the use of the 5/16" mounting screw.

---

[38] Contained in Pulmonetic Systems Replacement Screws Kit, P/N 11149

[39] *See Appendix E - Reference Information, External Accessories Screw Location, Type and Length* for

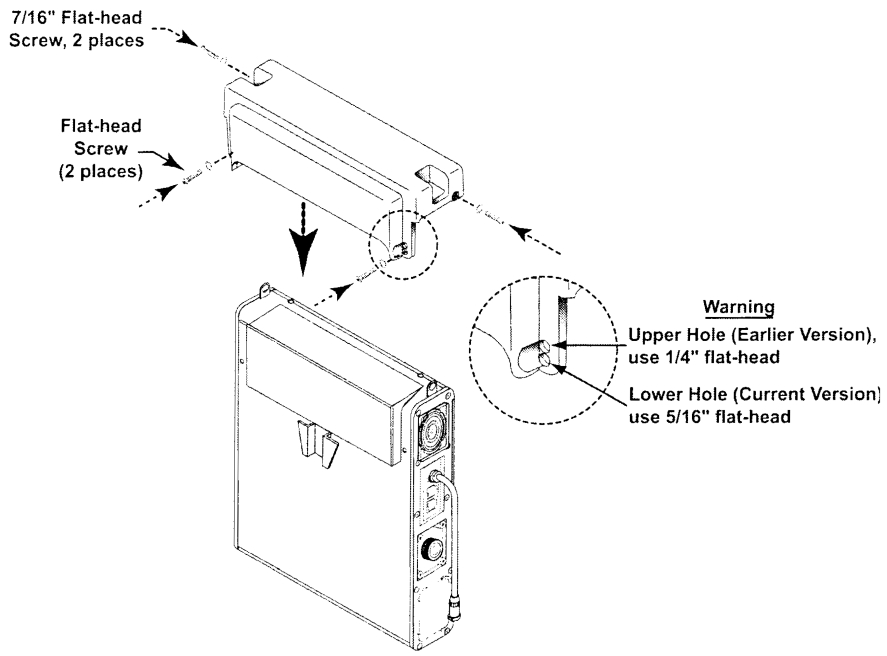

5) Torque tighten the mounting screws to these specified values (**Caution**: Do not ove tighten to avoid damage to the finish washers).
   - Torque tighten the screws in the legs of the boot to **60 in-oz** (0.42 Nm)
   - Torque tighten the screws in the sides of the boot to **20 in-oz** (0.14 Nm)

To reinstall the Lower Protective Boot[40]:

1) Lay the ventilator down (front up) and orient the Lower Protective Boot to the ventilator as shown in the illustration below.
2) Move the boot into position on the bottom of the ventilator and align its four screw holes with the corresponding holes in the ventilator side panels.
   - Ensure the orientation arrows on the bottom of the boot are aligned "up", as shown below.
3) Insert and thread four 7/16" flat-head mounting screws with finish washers through the screw holes in the sides of the Lower Boot; as indicated in the illustration below.
4) Torque tighten all four screws in the boot to **20 in-oz** (0.14 Nm) (**Caution**: Do not over tighten to avoid damage to the finish washers).

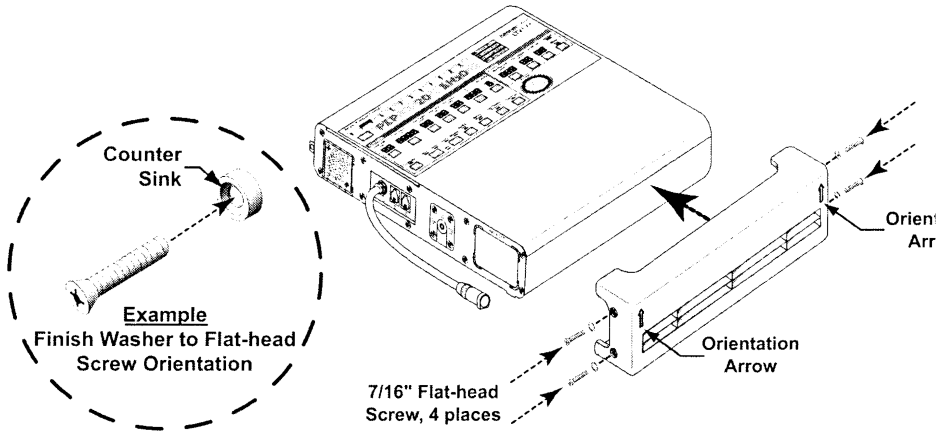

[40] *See Appendix E - Reference Information. External Accessories Screw Location. Type and Length* for

Boots, Installation

Parts Required for Installation:	Tools Required:
• Protective Boot, Upper (1) P/N 11421[41] • Protective Boot, Lower (1) P/N 11420[41] • Replacement Screws Kit, P/N 11149 **Replace if damaged:** • Finish Washers (6) P/N 10191[42]	• Phillips / cross tip screwdriver with torque meter

To install the Upper Protective Boot[43]:

1) Carefully place and support the disconnected ventilator in an upright position on a clean, dry surface.
2) Using a Philips-head screwdriver, remove the two upper Back Panel pan-head and two side panel flat-head mounting screws indicated in the illustration on the next page.
   - Do not remove the mating finish washers.
3) Orient the Upper Protective Boot over the ventilator as shown in the illustration on the next page. Move the boot down into position on the top of the ventilator and align its four screw holes with the corresponding holes in the ventilator back and side panels.
4) Insert and thread two 7/16" flat-head mounting screws with finish washers through the screw holes in the sides of the Upper Boot, as indicated in the illustration on the next page.
5) Insert and thread two flat-head mounting screws with finish washers through the screw holes in the legs of the Upper Boot, as indicated in the illustration on the next page.

WARNING !

Specific Boot Installation Screw Location - One leg of the Upper Protective Boot has an additional screw hole (furthest from the end of the leg);

- On earlier version ventilators, the screw hole will align with the upper hole in the boot and requires the use of the 1/4" mounting screw.
- On current version ventilators, the screw hole will align with the lower hole in the boot and requires the use of the 5/16" mounting screw.

---

[41] Contained in Pulmonetic Systems Protective Boots Installation Kit, P/N 11550

[42] Contained in Pulmonetic Systems Replacement Screws kit, P/N 11149.

[43] *See Appendix E - Reference Information, External Accessories Screw Location, Type and Length* for

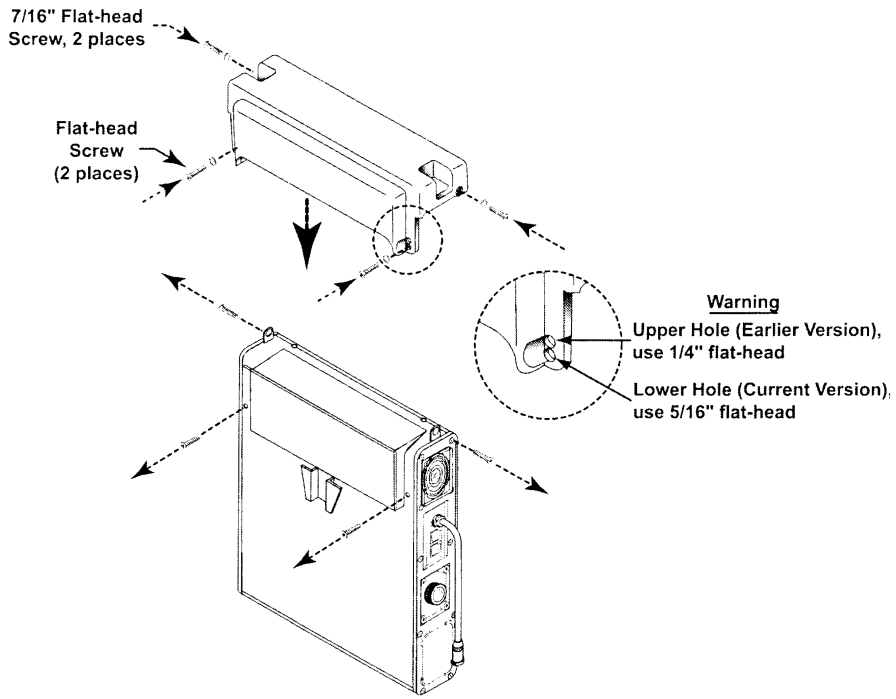

6) Torque tighten the mounting screws to these specified values (**Caution**: Do not over tighten to avoid damage to the finish washers).
   - Torque tighten the screws in the legs of the boot to **60 in-oz** (0.42 Nm)
   - Torque tighten the screws in the sides of the boot to **20 in-oz** (0.14 Nm)

To install the Lower Protective Boot[44]:

1) Lay the ventilator down (front up) and use a Philips-head screwdriver to remove the four flat-head mounting screws in the ventilator's side panels, as indicated in the illustration below.
   - Do not remove the mating finish washers.
2) Orient the Lower Protective Boot to the ventilator as shown in the illustration below. Move the boot into position on the bottom of the ventilator and align its four screw holes with the corresponding holes in the ventilator side panels.
   - Ensure the orientation arrows on the bottom of the boot are aligned "up", as shown below.
3) Insert and lightly thread four 7/16" flat-head mounting screws with finish washers through the screw holes in the sides of the Lower Boot; as indicated in the illustration below.
4) Torque tighten all four screws in the boot to **20 in-oz** (0.14 Nm) (**Caution**: Do not over tighten to avoid damage to the finish washers).

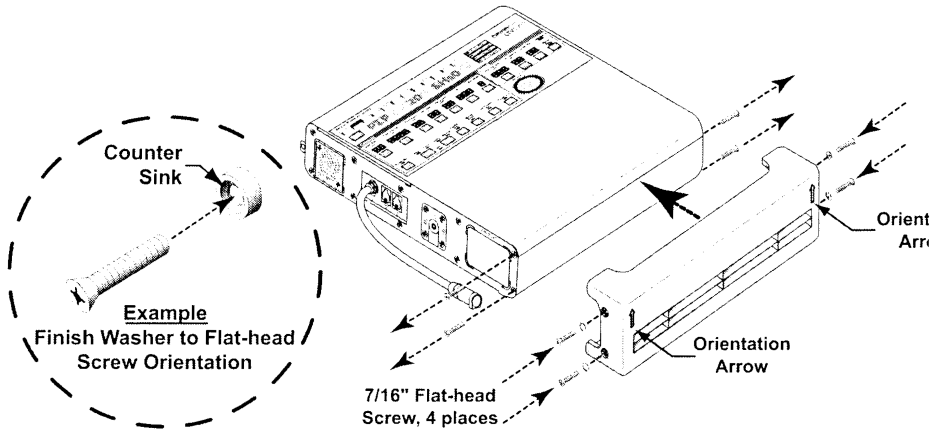

[44] *See Appendix E - Reference Information, External Accessories Screw Location, Type and Length* for

LTM/ LTV® Mounting Bracket

In order to accommodate an LTM™ Graphics Monitor, a LTM/ LTV® Mounting Bracket may be mounted on an LTV® Series Ventilator. To service internal components of the LTV® ventilator, the Mounting Bracket must be removed.

This section is divided into four sub-sections to accommodate the removal, replacement, or installation of the LTM/ LTV® Mounting Bracket under the following conditions:

- LTM/ LTV® Mounting Bracket, Temporary Removal (to allow removal of the Back Panel)
- LTM/ LTV® Mounting Bracket, Permanent Removal (permanently remove the bracket)
- LTM/ LTV® Mounting Bracket, Reinstallation (replace bracket after ventilator maintenance)
- LTM/ LTV® Mounting Bracket, Installation (bracket not previously installed)

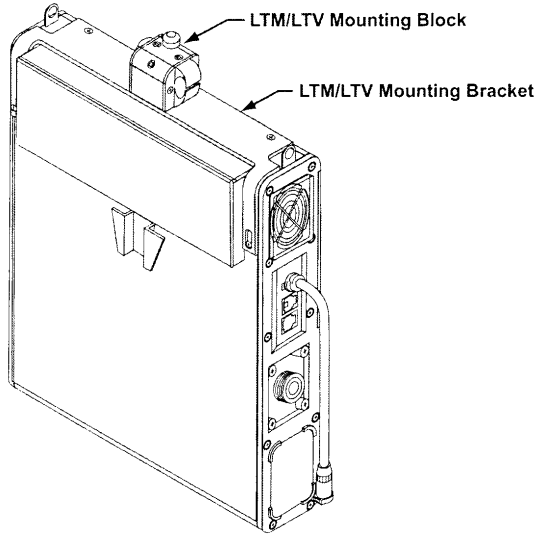

WARNING !

Mounting Screw Use – Internal damage to the ventilator may result if the wrong length mounting screws are used when installing or removing external accessories.

Accessories Mounting Screws - Refer to the information contained in Pulmonetic Systems Replacement Screws Kit, P/N 11149, to determine the appropriate accessories mounting screws or accessories replacement screws location, type and length to use when removing or exchanging external accessories on an LTV® Series Ventilator.

LTM/LTV® Mounting Bracket, Temporary Removal

Parts Required for Replacement:	Tools Required:
• None	• Phillips / cross tip screwdriver with torque meter • 7/64" Allen wrench

To temporarily remove the LTM/LTV® Mounting Bracket[45]:

1) Lay the disconnected ventilator on a clean dry surface, use a 7/64" Allen wrench and remove the three mounting block screws and mounting block, as shown below.
   - Retain the screws for reuse when the mounting block is reinstalled.
2) **Prior to removing the remaining Mounting Bracket screws**, make note of the position of the screw in the leg of the Mounting Bracket with a circular notch just above the elongated screw slot (see *illustration* below).
   - On earlier version ventilators, the screw hole behind this slot will align in the top half of the slot (near the circular notch) and in the lower half of the slot for current version ventilators.
3) Use a small Philips-head screwdriver and remove the five ventilator Back Panel mounting screws and LTM/ LTV® Mounting Bracket, as shown.
   - Retain the screws for reuse when the Mounting Bracket is reinstalled.

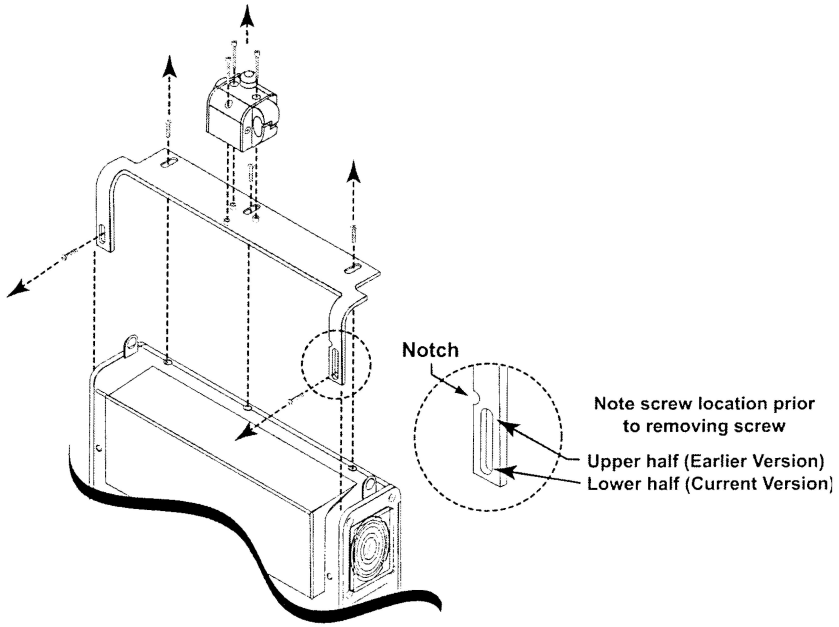

[45] *See Appendix E - Reference Information, External Accessories Screw Location, Type and Length* for

LTM/LTV® Mounting Bracket, Permanent Removal

Parts Required for Replacement:	Tools Required:
• Replacement Screws Kit, P/N 11149	• Phillips / cross tip screwdriver with torque meter

To permanently remove the LTM/LTV® Mounting Bracket[46]:

1) Remove the LTM/ LTV® mounting block and bracket (see *instructions* on page 8-17).
2) Insert five ventilator Back Panel replacement mounting screws (from Replacement Screws Kit, P/N 11149) and torque tighten to **60 in-oz** (0.42 Nm), as shown below.
   - To accommodate screw insertion and thread alignment, some pressure may need to be applied to the ventilator Back Panel and housing.

> ***WARNING!***
>
> **Specific Bracket Replacement Screw Location –** One leg of the LTM/ LTV® Mounting Bracket has a circular notch just above the elongated screw slot;
> - On earlier version ventilators (screw was positioned in the upper half of the Mounting Bracket leg screw slot) the use of a 3/16" mounting screw is required.
> - On current version ventilators (screw was positioned in the lower half of the Mounting Bracket leg screw slot) the use of a 1/4" mounting screw is required.

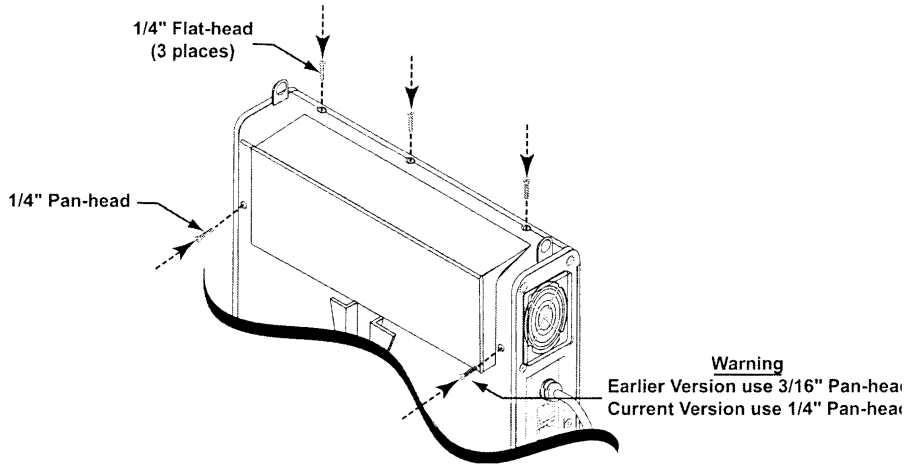

[46] *See Appendix E - Reference Information. External Accessories Screw Location. Type and Length* for

LTM/LTV® Mounting Bracket, Reinstallation

Parts Required for Replacement:	Tools Required:
• Replacement Screws Kit, P/N 11149 **Replace if damaged:** • LTM/ LTV® Mounting Bracket, P/N 11125 • LTM/ LTV® Mounting Block, P/N 11146	• Phillips / cross tip screwdriver with torque meter • 7/64" Allen wrench

To reinstall the LTM/LTV® Mounting Bracket[47]:

1) Orient the ventilator and Mounting Bracket as shown on the next page, position the bracket on the ventilator and align its screw slots with the corresponding screw holes in the ventilator Back Panel.

2) Insert five ventilator Back Panel mounting screws and torque tighten to **60 in-oz** (0.42 Nm) as shown in the illustration on the next page.
   - To accommodate screw insertion and thread alignment, some pressure may need to be applied to the ventilator Back Panel and housing.

> ***WARNING!***
>
> **Specific Bracket Installation Screw Location** - One leg of the LTM/ LTV® Mounting Bracket has a circular notch just above the elongated screw slot;
>
> - On earlier version ventilators, the screw hole behind this slot will align in the upper half of the slot (nearest the circular notch) and requires the use of a 5/16" mounting screw.
> - On current version ventilators, the screw hole behind this slot will align in the lower half of the slot (furthest from the circular notch) and requires the use of a 3/8" mounting screw.

[47] *See Appendix E - Reference Information, External Accessories Screw Location, Type and Length* for

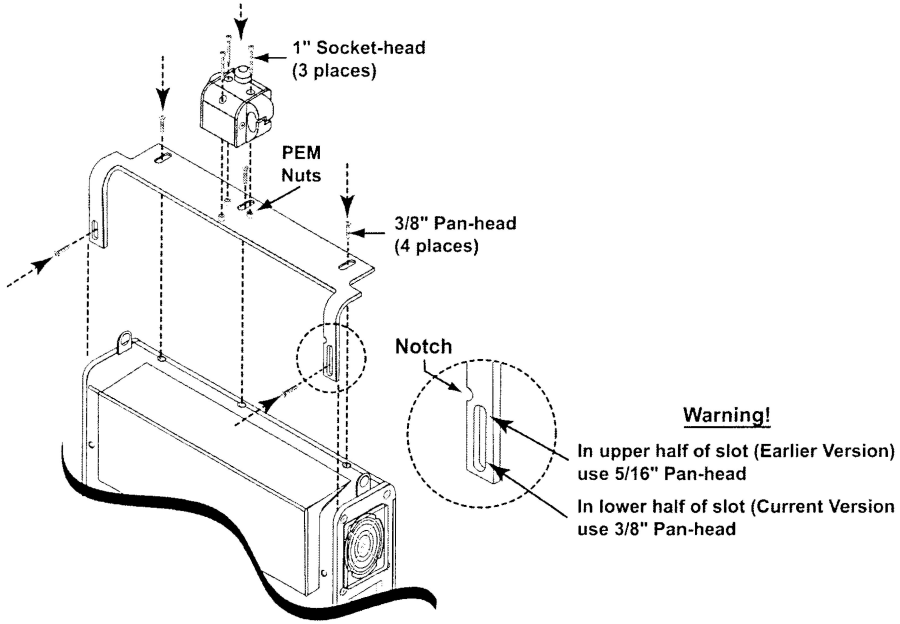

3) Orient the mounting block to the Mounting Bracket as shown in the illustration, and align its three counter bored screw holes to the corresponding PEM® nuts on the bracket.

4) Insert three Monitor Mounting Block screws, use a 7/64" Allen-wrench and torque tighten to **60 in-oz** (0.42 Nm).

LTM/LTV® Mounting Bracket, Installation

Parts Required for Installation:	Tools Required:
• LTM/ LTV® Mounting Block (1), P/N 11146[48] • LTM/ LTV® Mounting Bracket (1), P/N 11125[48] • Replacement Screws Kit, P/N 11149	• Phillips / cross tip screwdriver with torque meter • 7/64" Allen wrench

To install the LTM/LTV® Mounting Bracket[49]:

If LTV® Protective Boots are installed on the ventilator, the Upper Boot must be removed in order to mount the LTM/ LTV® Mounting Bracket. See page 8-7 for instructions.

1) Lay the disconnected ventilator on a clean dry surface, use a Philips-head screwdriver and remove the five Ventilator Back Panel Mounting screws, as shown in the illustration below.

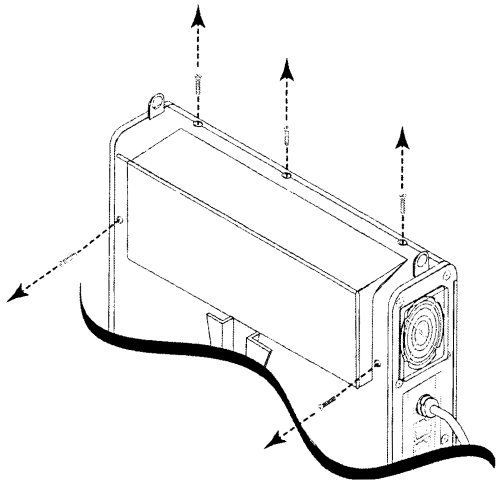

2) Orient the ventilator and Mounting Bracket as shown in the illustration on the next page, position the bracket on the ventilator and align its screw slots with the corresponding screw holes in the ventilator Back Panel.

---

[48] Contained in Pulmonetic Systems LTM to LTV® Mount Assembly Kit, P/N 11003.

[49] *See Appendix E - Reference Information, External Accessories Screw Location, Type and Length* for additional information.

3) Insert five Ventilator Back Panel Mounting screws and torque tighten to **60 in-oz** (0.42 Nm) as shown below.
   - To accommodate screw insertion and thread alignment, some pressure may need to be applied to the ventilator Back Panel and housing.

> ***WARNING!***
>
> **Specific Bracket Installation Screw Location** - One leg of the LTM/ LTV® Mounting Bracket has a circular notch just above the elongated screw slot;
> - On earlier version ventilators, the screw hole behind this slot will align in the upper half of the slot (nearest the circular notch) and requires the use of a 5/16" mounting screw.
> - On current version ventilators, the screw hole behind this slot will align in the lower half of the slot (furthest from the circular notch) and requires the use of a 3/8" mounting screw.

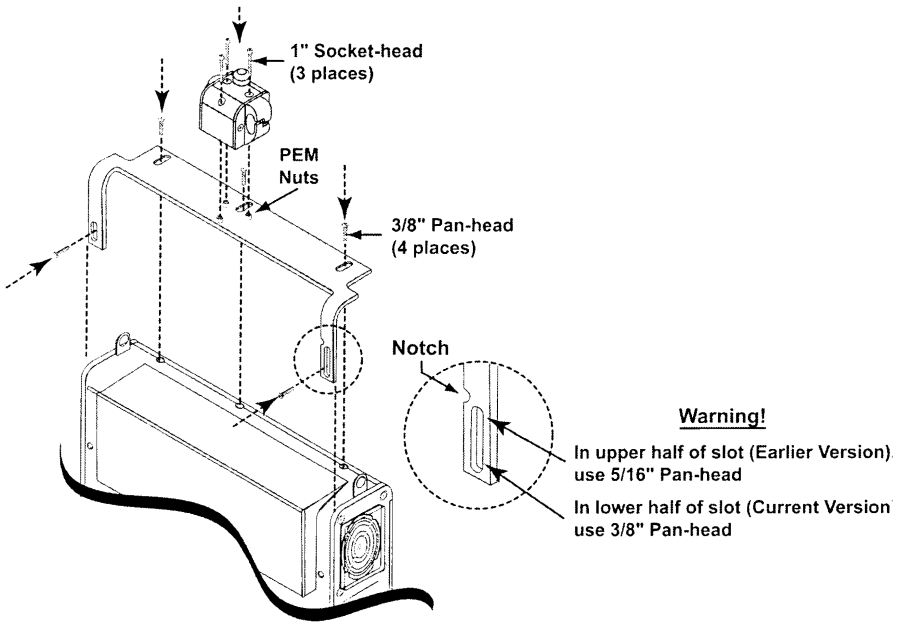

4) Orient the mounting block to the Mounting Bracket as shown in the illustration, and align its three counter bored screw holes to the corresponding PEM® nuts on the bracket.
5) Insert three Monitor Mounting Block screws, use a 7/64" Allen-wrench and torque tighten to **60 in-oz** (0.42 Nm).

Back Panel

Back Panel, Removal

Parts Required for Replacement:	Tools Required:
• Software version 3.11 or Higher ***or*** Programmed Memory PCBA Assembly P/N 10137[50]	• Phillips / cross tip screwdriver • Grounded anti-static wrist strap

1) If installed, remove the LTV® Protective Boots (see *instructions* on page 8-5) or LTM/ LTV® Mounting Bracket (see *instructions* on page 8-17).
2) Turn the ventilator face down. Remove the 6 flat-head screws and gray finish washers from the right and left sides of the ventilator as shown (3 from each side).
3) Remove the 3 flat-head screws from the top of the ventilator as shown.

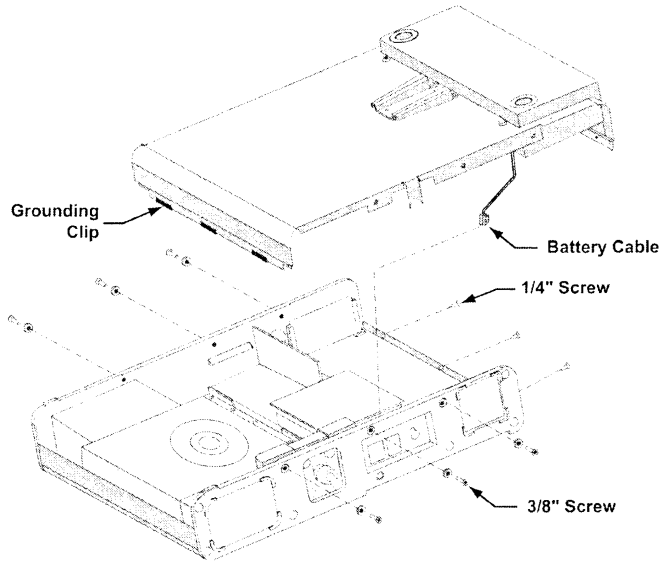

4) Lift the Back Panel off by separating the Back Panel at the top edge, pulling up gently and sliding the bottom edge out from under the connecting upper-Weldment edge at the bottom of the case. Remove the Back Panel carefully so the long tab extending over the Oxygen Blender is not bent or damaged. Turn the Back Panel on edge and set it beside the ventilator (the battery cable connecting the back to the Power Board will still be attached.)
5) To completely free the Back Panel, disconnect the Internal Battery cable from the Power Board.

---

[50] To ensure the advantage of all new features and reliability improvements. Pulmonetic Systems requires that the LTV® ventilator's operating software be at, or higher than, version 3.11 when performing any Maintenance and Calibration processes or Component Removal and Replacement procedures.

Dovetail Mounting Bracket, Replacement

The LTV® ventilator's Dovetail Mounting Bracket will not normally require servicing, however, if damaged it may be replaced on the Bottom Weldment, P/N 10104. (See illustration to identify a revision G or earlier and a revision H or later Bottom Weldment.

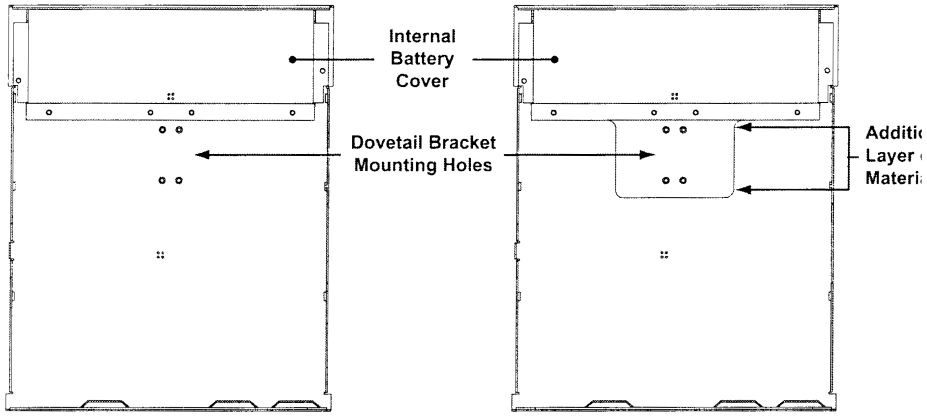

10104 Rev. G, or Earlier (inside surface)

10104 Rev. H, or Later (inside surface)

Parts Required for Replacement:	Tools Required:

• Dovetail Replacement Kit (1) P/N 11493
  • Dovetail Mounting Bracket[51] (1)
  • .114" diameter shaft, Pop Rivets[51] (4)
  • Dovetail Mounting Plate[51] (1)
	• Electric Drill Motor
	• 3/16" Drill bit
	• Pop Rivet tool[52]

1) Remove the ventilator Back Panel and disconnect the Internal Battery cable from the Power Board (see instructions on page 8-23).
   - The Internal Battery Cover and Internal Battery do not need to be removed.

[51] Contained in Pulmonetic Systems Dovetail Replacement Kit, P/N 11493.
[52] Pop Rivet tool capable of setting the .114" diameter shaft, Pop Rivets.

2) Prepare to drill out the existing Pop Rivets in the Dovetail Bracket by placing a block under the Back Panel that both supports the area directly below the Pop Rivets and will not allow the bottom of the Back Panel to rest on the work surface and become deformed or damaged when drill pressure is applied (see example in illustration).

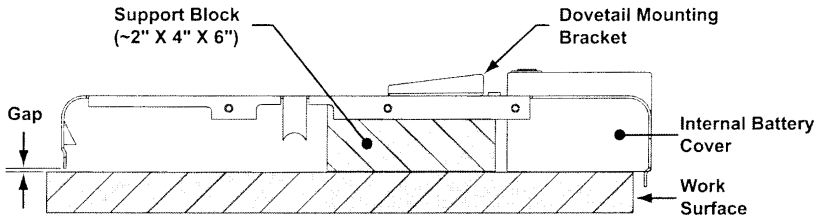

Caution!

Ensure the interior of the open ventilator does not become contaminated with metal debris by performing these procedures in a work area well away from the ventilator being serviced and thoroughly cleaning both sides of the Back Panel prior to reinstallation.

3) Using a Drill Motor and 3/16" Drill Bit, drill out the remaining center shaft of each of the four Pop Rivets.
   - Align the Drill Bit perpendicular to the surface of the Back Panel when drilling the rivets to avoid excessive enlargement of the mounting holes.
4) Remove and discard the damaged Mounting Bracket and thoroughly clean both sides of the Back Panel to remove all rivet or metal debris.
5) Oriented as shown, place the new Dovetail Mounting Bracket on the outside surface of the Back Panel. For Back Panels revision G or earlier, align the Dovetail Mounting Plate on the inside surface of the Back Panel, and align the mounting holes of all three components. For **revision H** or later, **do not use** the Dovetail Mounting Plate.

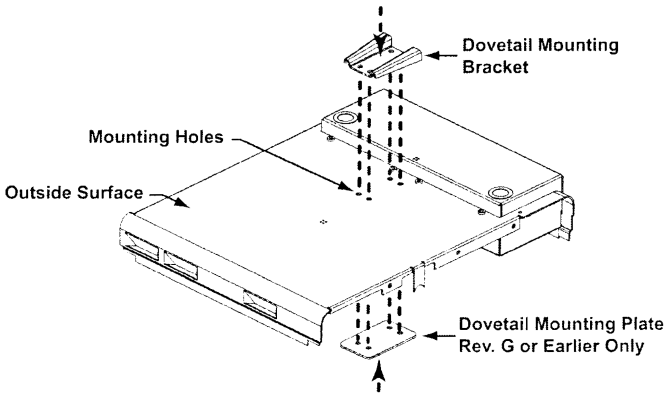

6) To fasten the Dovetail Mounting Bracket, Back Panel and Dovetail Mounting Plate together, use a Pop Rivet tool to insert and set a .114" diameter shaft Pop Rivet into each of the four holes.

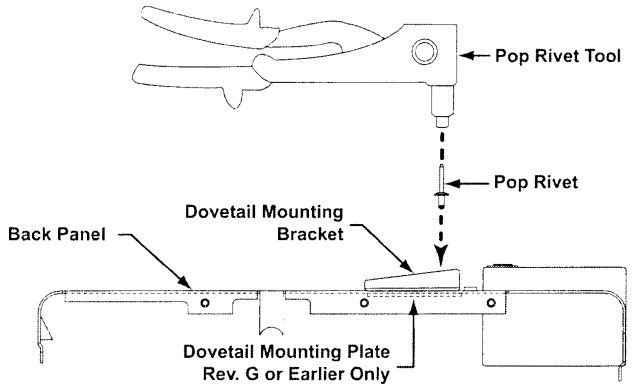

7) Thoroughly clean both sides of the Back Panel prior to reinstallation.

8) To replace the Back Panel, see instructions on page 8-27.

Back Panel, Reinstallation

Parts Required for Replacement:	Tools Required:
Replace if damaged: • 1/4" Flat head Screw (3) P/N 10430 • 3/8" Flat head Screw (6) P/N 10474 • Finish Washer (6) P/N 10191 • Grounding Clips (3) P/N 10752 • Thermo Conductive Pad P/N 11441 • Conductive Silicon Gasket P/N 10882 • Loctite 4591 Adhesive P/N 10773 • Dovetail Mounting Bracket[53] • Back Panel[54]	• Phillips / cross tip screwdriver with torque meter • Grounded anti-static wrist strap
If Not Previously Installed: • Software version 3.11 or Higher ***or*** Programmed Memory PCBA Assembly P/N 10137[55] • Spacer, Manifold to Back Panel (1) P/N 11521 • 7/16" Pan-head Screw (4) P/N 10433 • Spiral Wrap (1) P/N 10919 • Label, Stepping Motor Connector (1) P/N 11322 • Solenoid Manifold Assembly (1) P/N 14125[56]	

1) Before replacing the Back Panel, verify that any dipswitch settings have been restored to their correct positions.
2) Turn the ventilator face down.
3) Check the serial number on the back of the ventilator to ensure it matches the number found on the inside of the ventilator near the Fan assembly. If the serial numbers do not match, find the correct Back Panel for the ventilator before continuing.

---

[53] The Dovetail Mounting Bracket is contained in Pulmonetic Systems Dovetail Replacement Kit, P/N 11493

[54] Contact Pulmonetic Systems for Back Panel replacement information.

[55] To ensure the advantage of all new features and reliability improvements, Pulmonetic Systems requires that the LTV® ventilator's operating software be at, or higher than, version 3.11 when performing any Maintenance and Calibration processes or Component Removal and Replacement procedures.

[56] Solenoid Manifold Assembly P/N 14125 is for use on LTV® 800 ventilators in combination with Power PCBA P/N 11511 and software version 3.12 or higher ***or*** Power PCBA P/N 15000 and software version 3.13 or higher.

4) Verify the Thermo Conductive Pad is applied to the inside of the Back Panel. If it is not, apply one. See *instructions* on page 8-93.

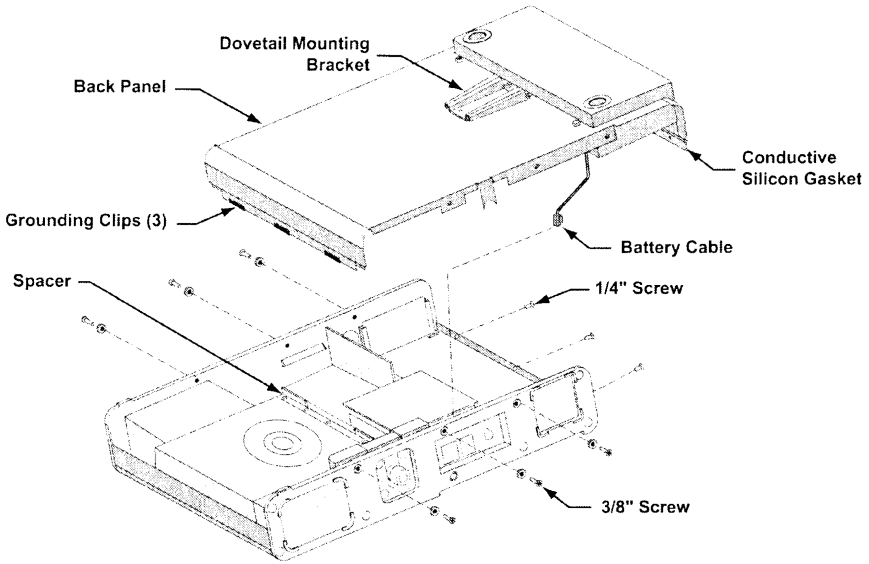

5) If a Manifold to Back Panel Spacer has previously been installed on the manifold plate (see *illustration*), proceed to step 9); otherwise continue.

6) Remove four 1/4" pan-head screws from the manifold plate and position a Manifold to Back Panel Spacer over the manifold plate, aligning its four mounting screw holes, as shown below. Insert and lightly thread four 7/16" pan-head screws through the spacer into the manifold plate screw holes and torque tighten to **20 in-oz** (0.14Nm).

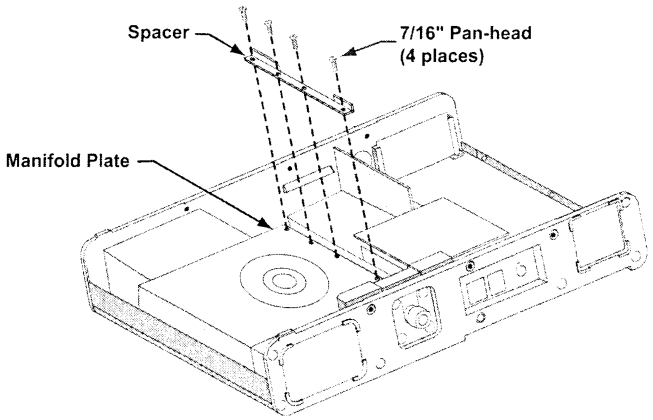

7) Verify Spiral Wrap and a Warning label have been installed on the Flow Valve's Stepping Motor 4-wire lead wires. If not, it is recommended that they be installed at this time. See *To replace the Flow Valve assembly* on page 8-46 for instructions.

8) For all LTV® 800 ventilators, verify that a current version Solenoid Manifold Assembly (P/N 14125) and Power PCBA have been previously installed in combination with the appropriate software. If not, install them at this time.
   - Solenoid Manifold Assembly P/N 14125 is for use on LTV® 800 ventilators in combination with Power PCBA P/N 11511 and software version 3.12 or higher ***or*** Power PCBA P/N 15000 and software version 3.13 or higher.
   - See *To replace the Power PCBA and DC Cord Pigtail related hardware* on page 8-74, *To replace the Solenoid Manifold* on page 8-90 and *To remove and replace the Memory Board* on page 8-63 for instructions.

9) Visually inspect the flexible tubes on the Solenoid Manifold to verify there are no tears, rips, pinholes or loose connections.

10) Verify that the loop of smaller tubing that connects the Flow Differential Transducer to the Solenoid Manifold does not loop past the edge of the Power PCBA into the compartment for the Internal Battery.

11) Verify that none of the tubing is kinked or twisted, and that it will not become kinked or pinched when compressed by the Back Panel. See *internal flexible tube routing configurations/diagrams* on pages *8-31* through *8-34).*

12) Inspect the grounding clips on the Back Panel and replace if they are missing or not making good connections. Missing or damaged grounding clips should be replaced using Loctite 4541 Adhesive.

13) Verify the grounding clips connected to the Oxygen Blender are aligned vertically inside the housing.

14) Verify the power cable for the Oxygen Blender is properly routed under the Motor Board, behind the connection bus to the Power Board.

15) Verify that the power cables for the Turbine, Sounder, Fan Assembly, Oxygen B lender, Flow Valve and Solenoid Manifold jumper cable are securely attached and not pinched, interfering, or in a position to be pinched against the Back Panel.

16) Inspect the Conductive Silicon Gasket located on the outside surface of the top of the Back Panel where the three ¼" screws secure the Back Panel to the ventilator. If the gasket is damaged, replace it with a new one. If no gasket is installed, then it is not necessary to install one in the ventilator.

17) If the Internal Battery cable is disconnected, reconnect the battery cable to the Power Board. To do so, place the bottom assembly on its side with the battery cable facing down and the battery compartment indexed towards the open area in the top of the ventilator. While holding the bottom assembly, connect the male 2-wire lead connector from the battery assembly to the 2-wire female connector on the Power Board. Be sure to correctly orient the keyed latch on the connector.
   - When correctly connected, the connector will snap into place.

18) Position the Back Panel over the ventilator. Slide the bottom edge of the Back Panel beneath the connecting upper-Weldment edge at the bottom of the case. Be sure that the louvers in the bottom edge of the Back Panel are hooked under the bypass tube from the turbine to the Flow Valve. Align the Back Panel carefully so the long tab that fits over the Oxygen Blender lines up correctly. Visually check that the battery leads are clear of the Motor Board heat sink and the side of the ventilator. Use caution: do not pinch any of the flexible tubes or rearrange the battery leads while sliding the Back Panel into place. Gently press the Back Panel into position.

19) Replace the 3 flat-head screws in the top of the ventilator as shown. Screws should be torqued to **60 in-oz** (0.42 Nm).

20) Replace the 6 flat-head screws and gray finish washers in the right and left sides of the ventilator as shown (3 in each side). Screws should be torqued to **20 in-oz** (0.14 Nm).

21) If previously installed, replace the LTV® Protective Boots (see *instructions* on page 8-10) or LTM/ LTV® Mounting Bracket (see *instructions* on page 8-19).

Internal Flexible Tube Routing Configurations

There are various different routing configurations of the LTV® Series Ventilator internal flexible tubing connected to the Solenoid Manifold, Flow Valve and Analog Board components. Configuration versions vary in accordance with the LTV® model, date of manufacture and Analog Board configuration installed.

Anytime service of internal components is performed on an LTV® Series Ventilator, the Solenoid Manifold flexible tube routing is to be inspected to establish if it is an "Earlier" or "Current" version configuration. If the tube routing of the ventilator being inspected is determined to be an "Earlier" version, it is to be upgraded to the "Current" version using Pulmonetic Systems LTV® Tubing Enhancement Kit, P/N 11684.

Review the information below and tube routing configuration diagrams shown on the following pages to verify which version exists in the LTV® ventilator being serviced.

LTV® 900, 950 or 1000 Internal Flexible Tube Routing Configurations:

Current Versions (*See page 8-32*)	• Flexible tubing outer diameters (.188") are smaller • Flow Differential Transducer is connected to Solenoid Manifold port #2 and, *through a reducing elbow*, port #7 • Airway Pressure Transducer is connected to Solenoid Manifold port #3 • Analog Board Valve Differential Transducer may be positioned to the "left" or "right" on the Analog Board
Earlier Versions (See *page* 8-33)	• Flexible tubing outer diameters (.219") are larger • Flow Differential Transducer is connected to Solenoid Manifold port #2 and port #3 • Airway Pressure Transducer is connected to Solenoid Manifold port #7 • Analog Board Valve Differential Transducer may be positioned to the "left" or "right"

LTV® 800 Internal Flexible Tube Routing Configurations:

Current Version (See *page* 8-34)	• Flexible tubing outer diameters (.188") are smaller
Earlier Version (See *page* 8-34)	• Flexible tubing outer diameters (.219") are larger

LTV® 900, 950 and 1000 Current Version Tube Routing Diagrams

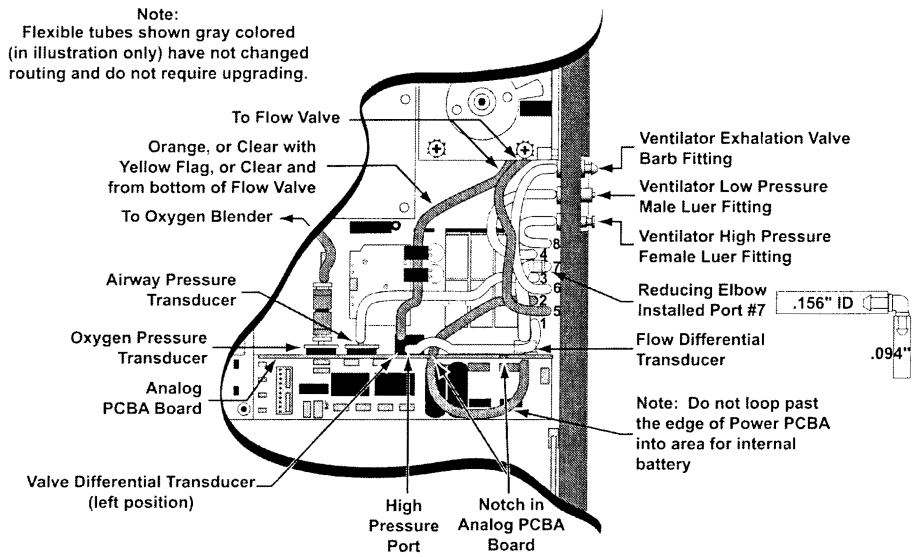

Current Version Tube Routing with Valve Differential Transducer Positioned to the Left

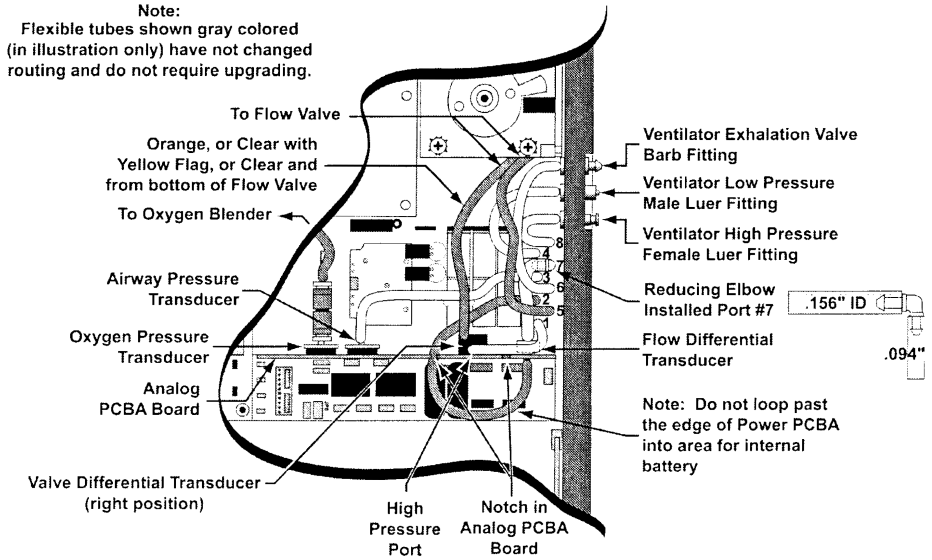

Current Version Tube Routing with Valve Differential Transducer Positioned to the Right

LTV® 900, 950 and 1000 Earlier Version Tube Routing Diagrams

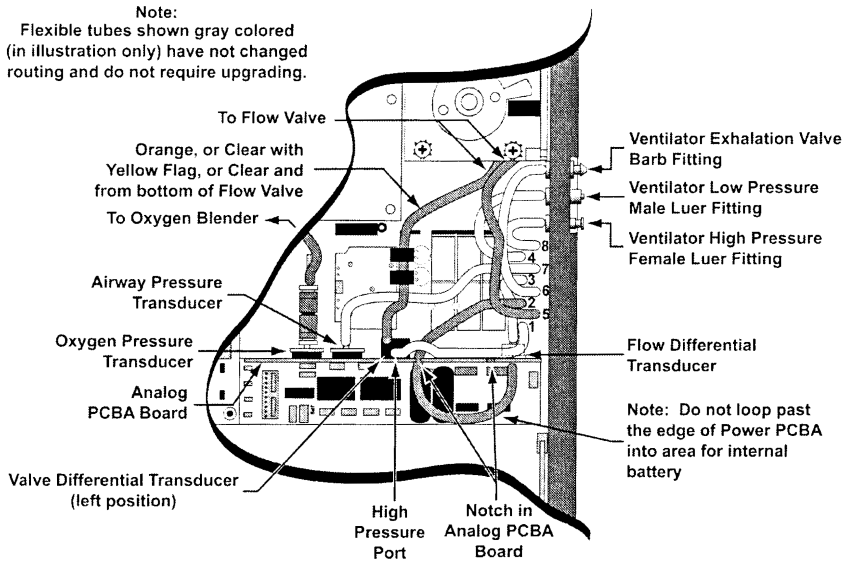

Earlier Version Tube Routing with Valve Differential Transducer Positioned to the Left

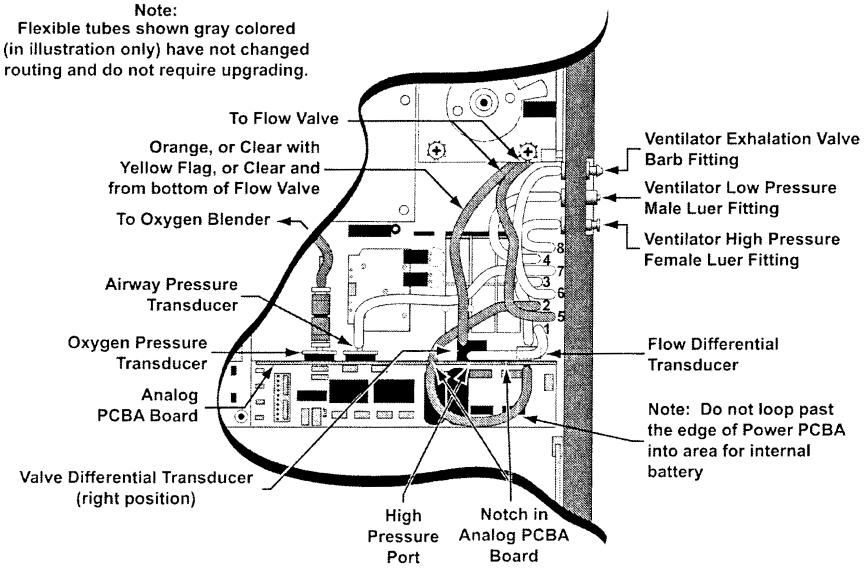

Earlier Version Tube Routing with Valve Differential Transducer Positioned to the Right

LTV® 800 Current and Earlier Tube Routing Diagram

Note:
Flexible tubes shown gray colored (in illustration only) have not changed routing and do not require upgrading.

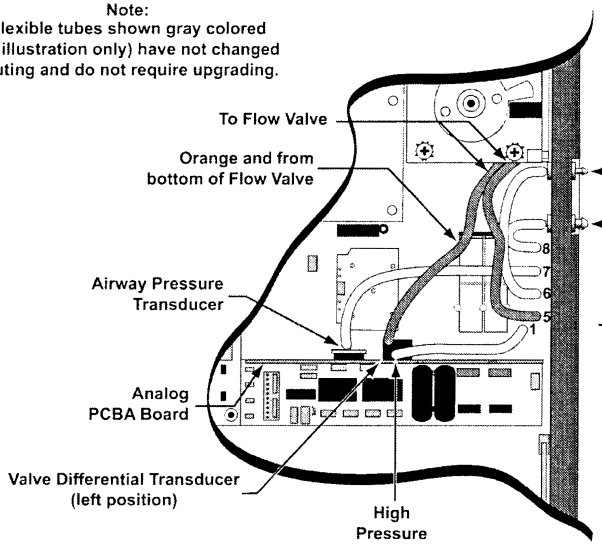

Note:
Tube routing version (Current or Earlier) is established by tube O.D. and I.D. dimensions.

Current and Earlier Tube Routing

Alarm Sounder Assembly

Parts Required for Replacement:	Tools Required:
• Sounder Bracket P/N 10119 • Sounder Assembly P/N 10197 • Alarm Bumper P/N 10573 **Replace if damaged:** • 1/4" Pan-head Screw (1) P/N 10435	• Phillips / cross tip screwdriver with torque meter • Grounded anti-static wrist strap • Scissors

To remove and replace the Sounder Assembly:

1) Remove the ventilator Back Panel and disconnect the Internal Battery cable from the Power Board (see *instructions* on page 8-23).
2) Disconnect the 2-wire Sounder connector from the Power Board.
3) Remove the pan-head screw from the Sounder Bracket, as shown.
4) Remove the Sounder Bracket.
5) For earlier version LTV's with a Battery Cache PCBA mounted on the Power PCBA, remove the Battery Cache PCBA mounting screw (3/4" pan-head) and carefully move the Battery Cache PCBA enough to allow for the removal of the Sounder Assembly.
6) Remove the Sounder Assembly and Alarm Bumper.

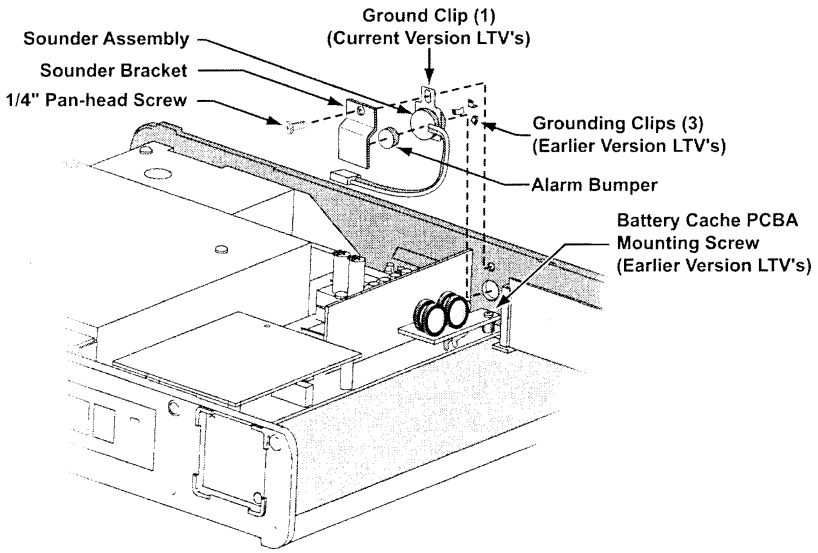

7) If an earlier version Sounder Assembly (does not have a ground clip installed on the sounder body) and grounding clips (3) had been previously installed; remove the grounding clips from the Alarm Sounder cut-out in the right side of the Upper Weldment prior to installing a current version Sounder Assembly (has a ground clip installed on the sounder body).

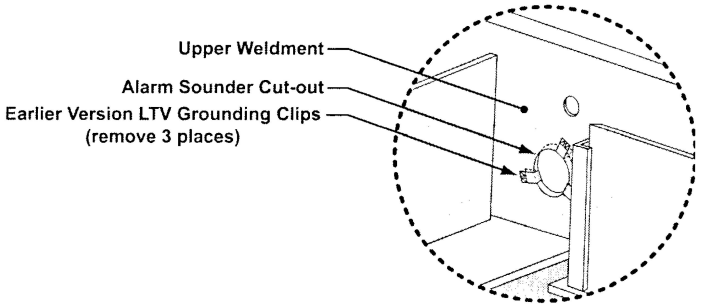

8) Place the Sounder Assembly in the cut-out in the right side of the Upper Weldment.

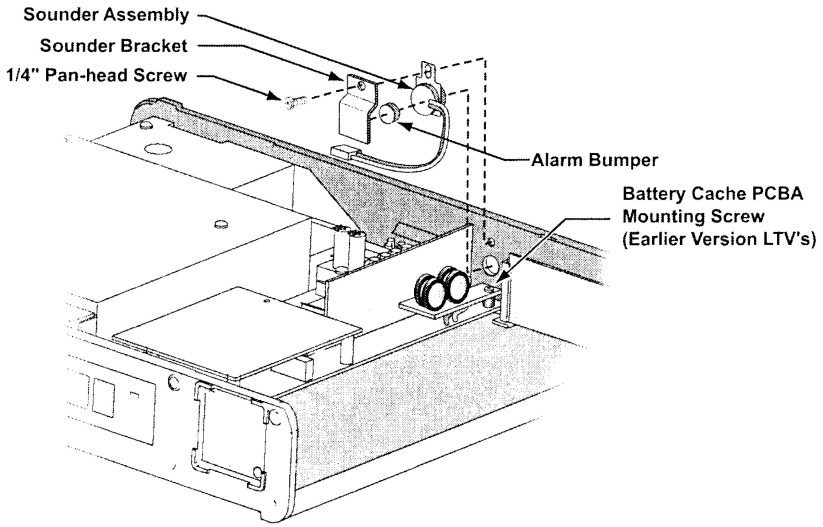

9) For earlier version LTV's with a Battery Cache PCBA mounted on the Power PCBA, carefully align the Battery Cache PCBA directly over the Power PCBA so its standoff is directly in line with the mounting hole nearest **U28** on the Power Board. Insert anc thread the 3/4" pan-head screw into the mounting hole through the Battery Cache and Power PCBA's and torque-tighten to **60 in-oz** (0.42 Nm).

10) Line the Sounder Bracket up with the sounder and the mounting hole in the side panel.
    - Orient the Sounder Assembly to align the slot in the grounding clip with the hole in the Sounder Bracket, as shown.
    - Replace the pan-head screw in the Sounder Bracket and torque tighten to **60 in-oz** (0.42 Nm).
11) Connect the 2-wire lead connector on the Sounder Assembly to the 2 pin male connector on the Power Board. The small legs on the Sounder Assembly wire connector should be indexed towards the vertical tab on the Power Board connector.
    - When the connector is properly seated, it will snap into place.
12) Reconnect the Internal Battery and replace the Back Panel (see *instructions* on page 8-27.)

Analog Board Assembly

Parts Required for Replacement:	Tools Required:
• Analog PCBA Assembly P/N 10136 or • Analog PCBA Assembly P/N 10643 or • Analog PCBA Assembly P/N 11803 **Replace if damaged:** • Pisco Connector P/N 10543 **If not previously installed:** • 1/4" Green Colored Pan-head Screws (2) P/N 10435G • LTV® Tubing Enhancement Kit (1) P/N 11684	• Phillips / cross tip screwdriver with torque meter • Grounded anti-static wris strap

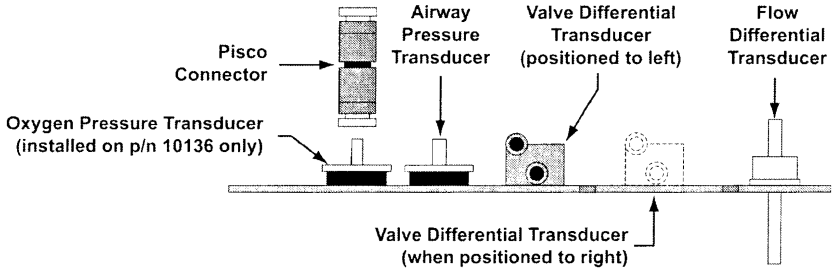

Analog PCBA

To replace the Analog Board:

1) Remove the Back Panel of the ventilator and disconnect the Internal Battery cable (see *instructions* on page *8-23*).

2) Disconnect the 5 flexible tubes from the Analog Board (one from the Flow Valve, and 4 from the Solenoid Manifold – see *configuration diagrams* page *8-31* through *8-34*).

> ***Note***
>
> Prior to disconnecting or removing any of the tubes, the Internal Flexible Tube Routing Configurations table and diagrams (*see pages 8-31 through 8-34*) must be reviewed to establish and note the tube routing configuration that exists in the particular ventilator being serviced. Once established, the applicable diagram may then be referred to when reconnecting the tubes.

3) For LTV® 1000 models, remove the Pisco Connector from the Oxygen Pressure Transducer. To do this, pinch the two white collars on the Pisco Connector toward each other and slide the Pisco Connector off the Oxygen Pressure Transducer.

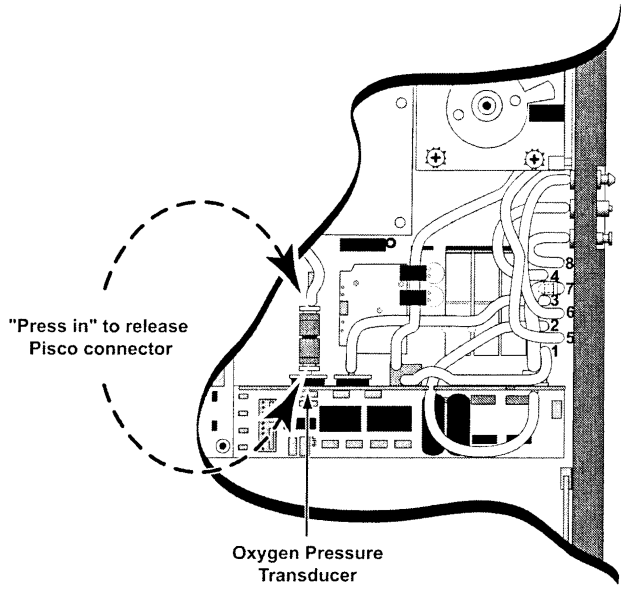

4) Remove the two screws that attach the Analog Board to the Power Board and remove the Analog Board.

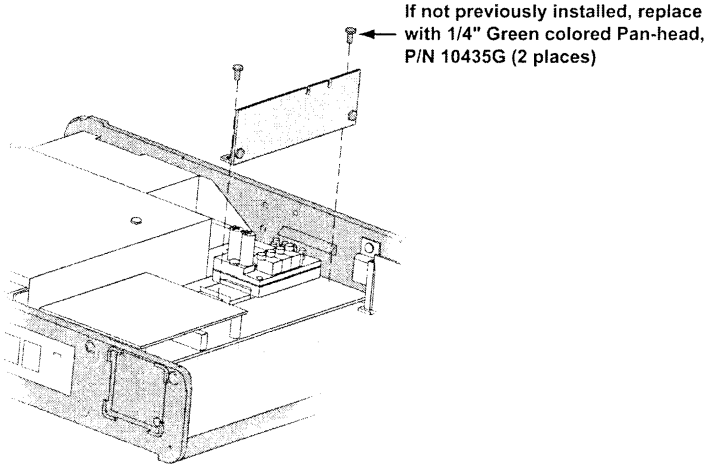

5) Select a new Analog Board to install:

Analog PCBA P/N	LTV® Ventilator Model			
	LTV® 1000	LTV® 950	LTV® 900	LTV® 800
10136	X	X	X	
10643		X	X	
11803				X

> ***Note***
> The use of hardware with revision levels lower than the most current revision available may result in some new software features not functioning. Contact Pulmonetic Systems for additional information.

6) Install the new Analog Board and replace the two mounting screws. Screws should be torqued to **60 in-oz** (0.42 Nm).
   - If not previously installed, replace the mounting screws (2) with 1/4" green colored pan-head screws, P/N 10435G.

7) Attach the Pisco Connector to the Oxygen Pressure Transducer. P/N 10136 Analog PCBAs must have a score mark approximately 1/8" from the tip of the Oxygen Pressure Transducer in order to tightly retain the Pisco Connector.
   - To add this score mark, gently rotate a sharp pair of cutting pliers around the Oxygen Pressure Transducer inlet approximately 1/8" from the top.
   - The score mark should be just deep enough to retain the Pisco Connector firmly. A score mark made too deeply can cause leaks and will require a replacement of the Analog Board.

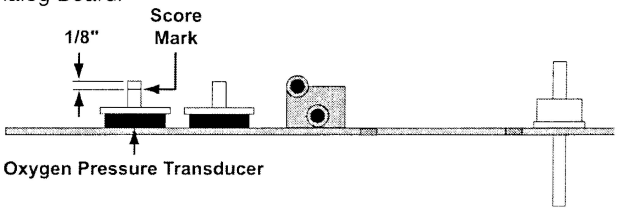

> ***Caution!***
> **Damage to the Analog Board** – Irreparable damage can occur to the Analog Board for use on LTV® 1000 model ventilators during this procedure. Use caution not to puncture the wall of the transducer when scoring the tip of the Oxygen Pressure Transducer.

8) Reconnect the 5 flexible tubes to the Analog PCBA Board following the internal flexible tube routing configuration/diagram previously noted (see *pages 8-31 through 8-34*). Inspect all flexible tubes for tears at the connecting ends and replace worn or damaged tubes if necessary.

9) Reconnect the Internal Battery and replace the Back Panel (see *instructions* on page 8-27).

External Inlet Filter

The External Inlet Filter should be removed and cleaned every 750 hours or once a month. If the ventilator is being operated in high dust or humidity environments, it may need to be cleaned more often. If the filter is damaged or can not be thoroughly cleaned, it should be replaced.

Parts Required for Replacement:	**Tools Required:**
Replace if damaged: • Inlet Filter, Reticulated Foam P/N 10258	• Mild cleanser • Soft cleaning brush

To clean or replace the External Inlet Filter:

1) Gently pinch the External Inlet Filter and remove it from its housing on the left side of the ventilator.

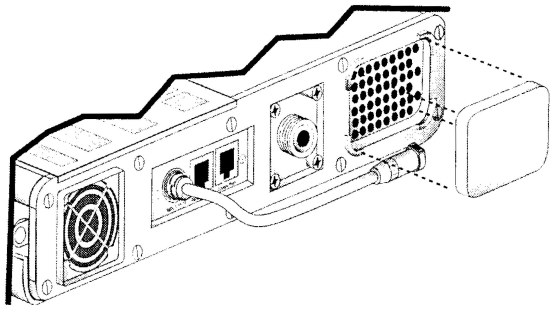

2) Clean the filter using a mild cleanser and warm water. Rinse the filter thoroughly to remove all traces of the cleanser and gently wring it out. Allow the filter to dry completely before replacing it in the ventilator.
3) Inspect the filter for damage. If the filter is not intact, shows signs of damage or cannot be completely cleaned, replace it with a new filter.
4) Replace the filter by tucking it into its housing on the left side of the vent. Make sure the filter lies flat and is seated all the way into the housing.

Fan Assembly

Parts Required for Replacement:	Tools Required:
• Fan Assembly P/N 10675 **Replace if damaged:** • 5/8" Flat-head Screw (2) P/N 10499 • Nut (2) P/N 10342	• Phillips / cross tip screwdriver with torque meter • Grounded anti-static wrist strap

One of two Fan housings will be installed in the ventilator. Identify the Fan housing:

Filterless Fan Housing

- Fan opening has a grid of small holes.
- Airflow is out of the ventilator case.
- Fan has no filter or grill.
- Left soft side has short standoffs with no grill brackets.

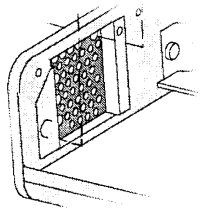

Filtered Fan Housing

- Fan opening is a single large opening
- Airflow is into ventilator case.
- Fan has a filter and grill.
- Left soft side has an extended fan bracket area.

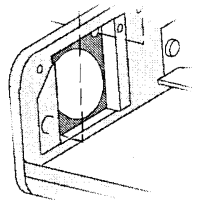

To replace the Fan assembly:

1) Remove the Back Panel of the ventilator and disconnect the Internal Battery cable (see *instructions* on page 8-23).
2) Disconnect the Fan connection from the Power Board. Care should be taken to be sure the dip switch settings are not changed. Dip switches are located directly below the Fan assembly.
3) For Filtered Fan Housing: Remove the left soft side.
4) Remove the 2 screws and nuts holding the Fan assembly.
5) Remove the Fan assembly.

6) **For Filterless Fan Housing:** Install the new Fan assembly oriented so the fan label faces the outside of the vent and the fan wires are in the corner closest to the Power Board. **Flow direction indicator should be directed towards the outside of the unit.**

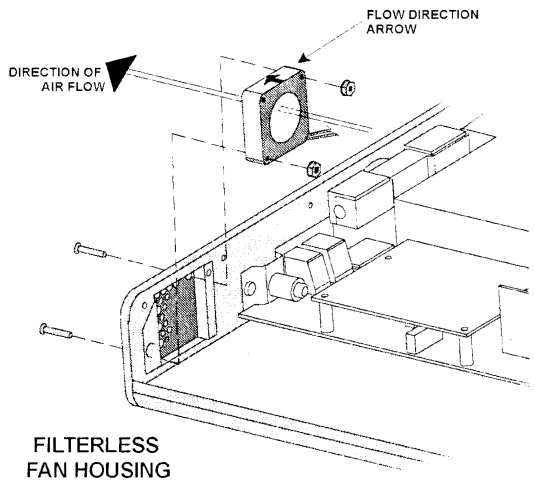

FILTERLESS FAN HOUSING

7) **For Filtered Fan Housing:** Install the new Fan assembly oriented so the fan label faces the inside of the vent and the fan wires are in the corner closest to the Power Board. **Flow direction indicator should be directed towards the inside of the unit.**

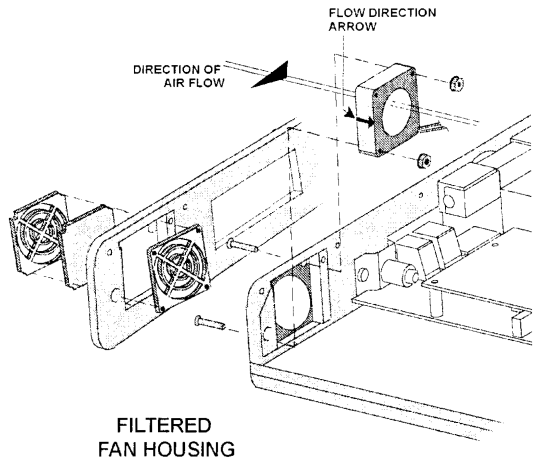

FILTERED FAN HOUSING

8) Replace the 2 screws and nuts holding the Fan assembly in place. Screws should be torqued to **40 in-oz** (0.28 Nm). Care should be taken to be sure the dip switch settings are not changed. Dip switches are located directly below the Fan assembly.
9) Connect the 2-wire connector from the Fan to the Power Board.
   - The connector is keyed to fit in only one direction and will snap into place when properly connected.
10) **For Filtered Fan Housing:** If the Fan grill bracket has been removed, replace it in the left soft side and replace the left soft side. Replace the Fan Filter and Fan Filter grill.
11) Reconnect the Internal Battery and replace the Back Panel (see *instructions* on page 8-27).

Cleaning the Fan Filter

The Fan Filter should be removed and cleaned every 750 hours or once a month. If the ventilator is being operated in high dust or humidity environments, it may need to be cleaned more often. If the filter is damaged or can not be thoroughly cleaned, it should be replaced.

To clean the Fan Filter:

1) Using a small screwdriver or long nose pliers, detach the Fan Filter grill from its housing.
2) Remove the Fan Filter by gently pinching the foam filter and pulling it out.

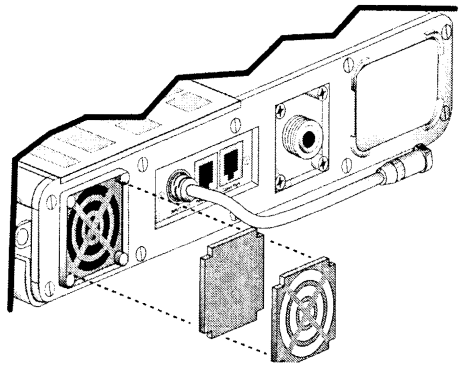

Note

If you touch the fan blades while removing the Fan Filter grill or filter, a **HW FAULT** will occur. This is normal. Clear the **HW FAULT** alarm by using the Silence / Reset button.

3) Gently bathe the filter in a solution of a mild liquid detergent and warm water.
4) Remove all detergent by thoroughly rinsing the filter in warm water.
5) Examine the filter for damage (discard and replace if necessary) and allow it to air dry ***before*** reinstallation.
6) Reinstall the filter.
7) Reposition the filter grill over the filter and apply light pressure until it fully seats ("clicks") into the filter housing.

Caution !

Wet or Damp Filters - Do not install a wet or damp filter into the LTV® Series Ventilators. This could damage the ventilator.

Flow Valve Assembly

Parts Required for Replacement:	Tools Required:
• Flow Valve Assembly P/N 10019 • Silicone Gel Lubricant P/N 10123[57] • Thermistor Cable P/N 11399[58] **Replace if damaged:** • Sealing Gasket P/N 10175 • 1 3/4" Pan-head Screw (2) P/N 10434 **If not previously installed:** • LTV® Tubing Enhancement Kit (1) P/N 11684 • Spiral Wrap (1) P/N 10919 • Label, Stepping Motor Connector (1) P/N 11322	• Phillips / cross tip screwdriver with torque meter • Grounded anti-static wrist strap • Flow Valve Insertion Tool (Mylar) P/N 14206[57]

To remove the Flow Valve assembly:

1) Remove the ventilator Back Panel and disconnect the Internal Battery cable from the Power Board (see *instructions* on page 8-23).

2) Disconnect the Flow Valve's 3-wire connector from the Power Board and the 4-wire connector from the Motor Board.

3) Find the 2 flexible tubes that connect the Flow Valve to the Solenoid Manifold and the Analog Board. Disconnect both tubes from the Solenoid Manifold and Analog Board.

> ***Note***
>
> Prior to disconnecting or removing any of the tubes, the Internal Flexible Tube Routing Configurations table and diagrams (*see pages 8-31 through 8-34*) must be reviewed to establish and note the tube routing configuration that exists in the particular ventilator being serviced. Once established, the applicable diagram may then be referred to when reconnecting the tubes.

4) Remove the 2 screws from the body of the Flow Valve

5) Lift the Flow Valve up and out of the ventilator case.

---

[57] The Silicone Gel Lubricant and Flow Valve Insertion Tool are available separately, or as part of the Maintenance and Calibration Kit, P/N 11566.

[58] Required for flow valves with VHome 200-240.

6) Disconnect the bypass tubing from the connector at the base of the Flow Valve.

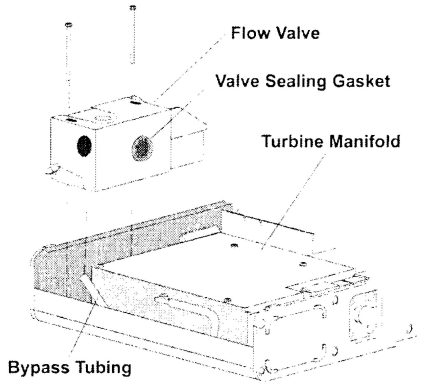

To replace the Flow Valve assembly:

1) If Spiral Wrap and a Warning label have previously been installed on the Flow Valve's Stepping Motor 4-wire leads, proceed to step 4); otherwise continue.
2) Wrap the 4-wire stepping motor lead wires with a 4.25" length of Spiral Wrap, P/N 10919, as shown below.
3) Push the spiral wrap up to the stepping motor and wrap a Stepping Motor Connector Warning Label, P/N 11322, around the 4-wire stepping motor lead wires, as shown below.

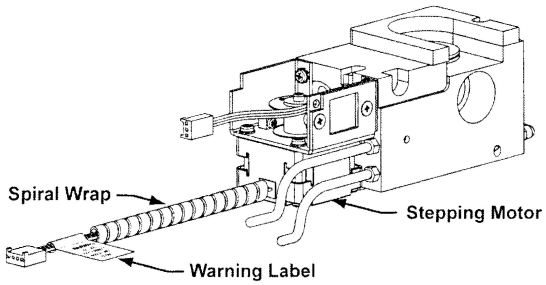

4) Connect the bypass tubing to the connector at the base of the new Flow Valve.

5) Apply a small amount of silicone gel lubricant to the flat surface area on the valve sealing gasket. Apply a small amount of silicone gel lubricant to the Mylar sheet insertion tool. Place the Mylar sheet insertion tool against the Turbine Manifold where it will contact the Flow Valve sealing gasket. This will allow the Flow Valve to be slipped into place without rolling or damaging the valve sealing gasket.

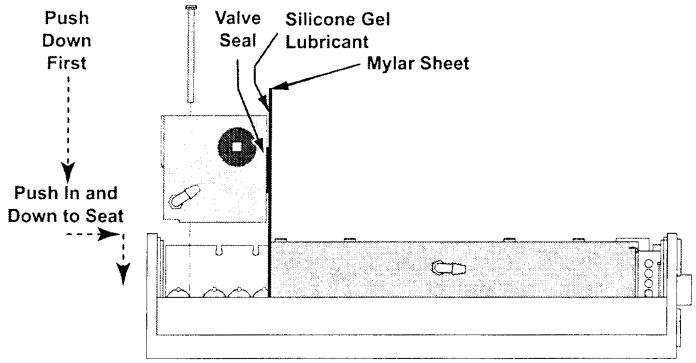

6) Slide the new Flow Valve assembly into place. Be sure not to catch any tubing or wiring under the manifold while it is being installed. The Flow Valve must be lined up so the screw seats on the inside of the Upper Weldment fit into the keyed slots in the bottom of the Flow Valve assembly.

7) Once the screw seats are in the slots, the Flow Valve body must be pressed towards the Turbine Manifold and then down so the screw seats slip into the mating holes in the bottom of the Flow Valve assembly.

8) **If the Flow Valve assembly being installed is VHome 220 +/- 20:**

- Attach the terminal connector of the Thermistor Cable P/N 11399 with the orientation crimp side down as shown below.

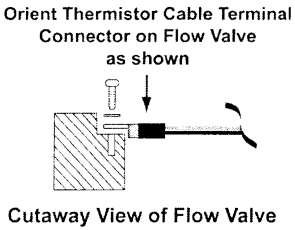

Cutaway View of Flow Valve

> ***Note***
>
> If the Flow Valve assembly being installed does not have a VHome position in the range of 220 +/- 20, do not install a Thermistor Cable.

9) Carefully route the Thermistor Cable through the tubing, through the notch in the Analog PCBA, and connect it to JP8 on the Power PCBA. If the Flow Valve being installed has a VHome value of 200-240, and the Power PCBA does not have a header in the JP8 position, then the Power PCBA should be replaced with one that does have the necessary header.

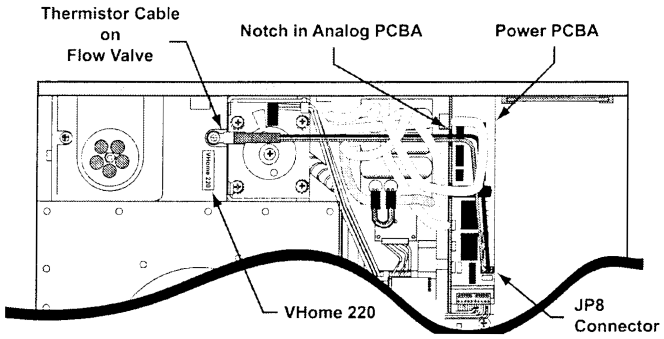

> ***Note***
>
> Make certain the Thermistor Cable does not interfere with the Flow Valve operation, and that it does not strain the tubing connected to the Solenoid Manifold and Analog PCBA.

10) Replace the 2 screws into the Flow Valve assembly. Screws should be torqued to **60 in-oz** (0.42 Nm).

11) Loop the bypass tubing into the space between the bottom of the manifold and the bottom edge of the Upper Weldment so that it is out of the way and will not be pinched when the back of the ventilator is replaced.

12) There are 2 flexible tubes attached to the Flow Valve:

- Original configuration ventilator Flow Valves have two clear tubes (top and bottom).
- Some ventilator Flow Valves have one clear tube (top) and one clear tube with a yellow flag (bottom).
- Current configuration ventilator Flow Valves have one clear tube (top) and one orange tube (bottom).

Connect the flexible tubes matching the configuration of the LTV© ventilator model being serviced to the Analog Board:

- Orange tube,
- Clear tube with the yellow flag,
- Clear tube on the bottom of the Flow Valve (on first original units only)

13) Connect the top flexible tube (clear on all configurations) from the Flow Valve to por #5 on the Solenoid Manifold as shown. (Note difference in location of Valve Differential Transducer between internal flexible tube routing configurations; see *pages 8-31 through 8-34.*)

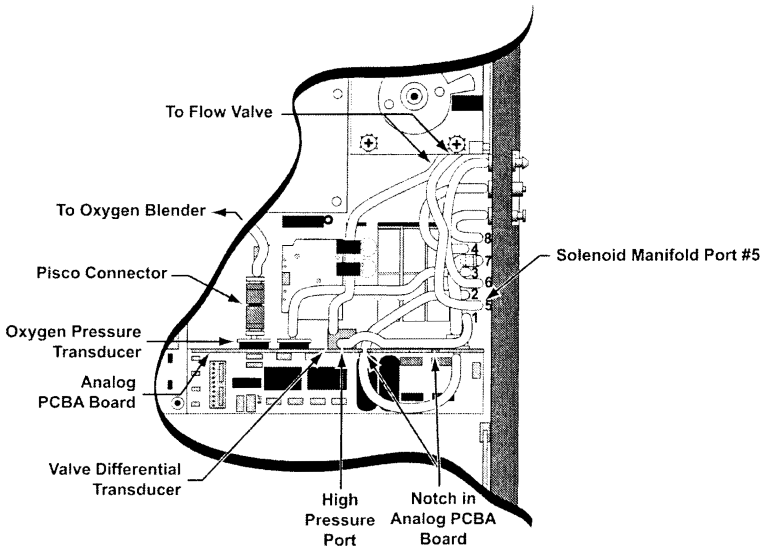

14) Connect the 3-wire connector to the Power Board and the 4-wire connector to the Motor Board.
    - Both connectors are keyed to only be installed in one direction and will snap into place when properly connected.
15) Reconnect the Internal Battery (see *instructions* on page 8-27).
16) Set dip switch 5 to the **ON** position and enter the **FLOW VALVE** menu (see *instructions* on page 6-34.)

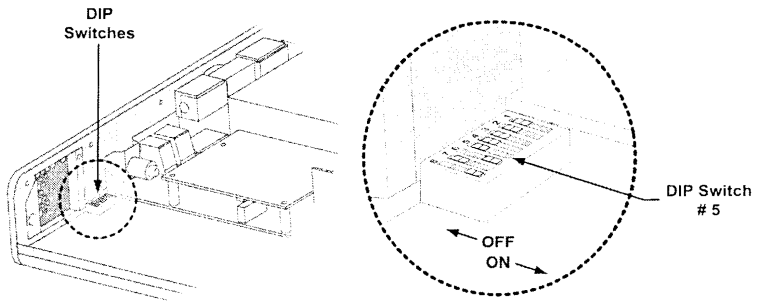

17) Select the VHome setting that is appropriate for your Flow Valve and press Select (see *instructions* on page 6-34.)

Flow Valve has:	**Use VHome setting:**
Two clear flexible tubes	244
One clear flexible tube and One clear flexible tube with a yellow flag	244
One clear flexible tube and One opaque orange flexible tube	125 (range = 115 - 135)
One clear flexible tube, one opaque flexible tube, Thermistor Cable, and VHome label in the range of 220-240.	Setting printed on VHome Label on Flow Valve (range = 200 - 240[59])

18) Enter the **TEMP COMP** menu.
- If the Thermistor Cable is installed, set **TCOMP** to the **ON** position.
- If the Thermistor Cable is not installed, set **TCOMP** to the **OFF** position. (See *instructions* on page 6-35.)

19) Power the ventilator off and set dip switch 5 to the **OFF** position (see *instructions* on page 6-5).

20) Replace the Back Panel (see *instructions* on page 8-27).

[59] Only available Flow Valve VHome setting – 200-240

Front Panel

Parts Required for Replacement:		Tools Required:
For LTV® 800:		
• Membrane Switch Panel	P/N 11806-1	• Phillips / cross tip screwdriver with torque meter
• Overlay Panel English	P/N 11806-2	• Dental pick or flat tip screwdriver
For LTV® 900:		• Grounded anti-static wrist strap
• Membrane Switch Panel	P/N 10641-1	
• Overlay Panel English	P/N 10641-2	
• Overlay Panel Japanese	P/N 10641-3	
• Overlay Panel Spanish	P/N 10641-4	
• Overlay Panel German	P/N 10641-5	
• Overlay Panel French	P/N 10641-6	
• Overlay Panel Italian	P/N 10641-7	
• Overlay Panel Portuguese	P/N 10641-8	
For LTV® 950:		
• Membrane Switch Panel	P/N 10953-1	
• Overlay Panel English	P/N 10953-2	
• Overlay Panel Japanese	P/N 10953-3	
• Overlay Panel Spanish	P/N 10953-4	
• Overlay Panel German	P/N 10953-5	
• Overlay Panel French	P/N 10953-6	
• Overlay Panel Italian	P/N 10953-7	
• Overlay Panel Portuguese	P/N 10953-8	
For LTV® 1000 (without I/E Hold):		
• Membrane Switch Panel	P/N 10114-1	
• Overlay Panel English	P/N 10114-2	
• Overlay Panel Japanese	P/N 10114-3	
• Overlay Panel Spanish	P/N 10114-4	
• Overlay Panel German	P/N 10114-5	
• Overlay Panel French	P/N 10114-6	
• Overlay Panel Italian	P/N 10114-7	
• Overlay Panel Portuguese	P/N 10114-8	
For LTV® 1000 (with I/E Hold):		
• Membrane Switch Panel	P/N 11406-1	
• Overlay Panel English	P/N 11406-2	
• Overlay Panel Japanese	P/N 11406-3	
• Overlay Panel Spanish	P/N 11406-4	
• Overlay Panel German	P/N 11406-5	
• Overlay Panel French	P/N 11406-6	
• Overlay Panel Italian	P/N 11406-7	
• Overlay Panel Portuguese	P/N 11406-8	

To replace the Front Panel:

1) Remove the Back Panel of the ventilator and disconnect the Internal Battery cable (see *instructions* on page 8-23).
2) Remove the Motor Board (see *instructions* on page 8-65).
3) Disconnect from the Solenoid Manifold: The 3 flexible tubes connected to the side panel of the ventilator, and the 2 flexible tubes going to the Flow Valve.
4) Disconnect the 2-wire Fan connector, 3-wire Flow Valve connector, 4-wire rotary switch connector, and 2-wire sounder connectors from the Power Board.
5) Remove the Sounder Assembly (see *instructions* on page 8-35).
6) Remove the Power Board (see *instructions* on page 8-73). The Analog Board may be left attached to the Power Board. Use caution not to catch the Power Board on the Sounder Bracket while removing it.
7) **Handle the ribbon cable carefully to prevent any damage to the silver contact area.** Attempting to remove the ribbon cable without opening the ZIF connector will damage the ribbon cable and may require replacing the front membrane panel. Slide the ZIF connector on the keypad ribbon cable open and carefully remove the ribbon cable from the connector.

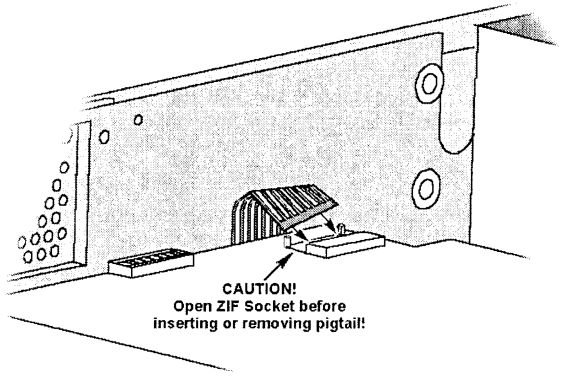

8) Using a dental pick or flat tip screwdriver, lift one corner of the membrane panel and overlay. Pull the membrane panel and overlay away from the Upper Weldment. Removing the panel will destroy it.
9) Remove all adhesive or panel parts from the front of the Upper Weldment. **The surface must be clean and free of obstructions before installing the new panel.** Any unevenness on the surface of the Upper Weldment could damage the new panel or cause it to operate incorrectly.
10) Remove the protective backing from the **bottom side only** of the new membrane panel.
11) Hold the Upper Weldment upright against a well-lit backdrop to assist in aligning the membrane panel with the cutouts in the Upper Weldment.

12) **Handle the ribbon cable carefully to prevent any damage to the silver contact area.** Carefully slide the ribbon cable through the slot in the Upper Weldment.

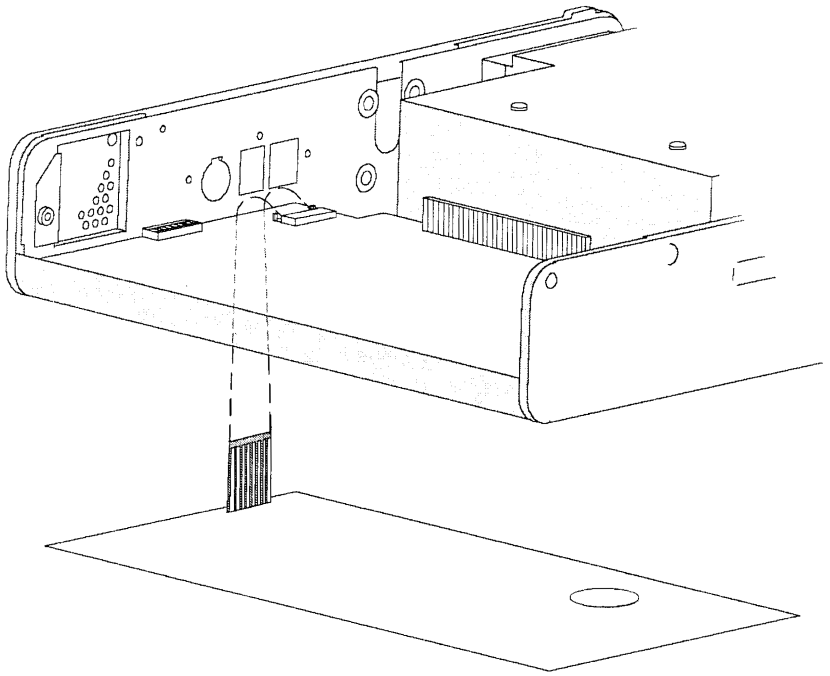

13) **Use caution aligning the membrane panel -** once it is applied, it cannot be removed without destroying it. Carefully align the membrane panel with the Upper Weldment, making sure the cutout for the rotary switch is centered over the well in the Upper Weldment and that all display windows align over the corresponding openings. Press the membrane panel into place making sure the adhesive is well seated in all places.

14) Turn the ventilator over. Reconnect the ribbon cable (see *instructions* on page 8-59.) **Use caution not to scratch the ribbon cable.**

15) Replace the Power Board (see *instructions* on page 8-73).

16) Replace the Alarm Sounder, (see *instructions* on page 8-35).

17) Reconnect the 2-wire Fan connector, 3-wire Flow Valve connector, 4-wire rotary switch connector, and 2-wire sounder connectors to the Power Board.

- The keyed connectors can only be installed in one direction and will snap into place when properly connected.

18) Reconnect the 5 flexible tubes to the Solenoid Manifold following the internal flexible tube routing configuration/diagram previously noted (*see pages 8-31 through 8-34*). Inspect all flexible tubes for tears at the connecting ends and replace worn or damaged tubes if necessary.

19) Replace the Motor Board using care to align the pass through connectors (see *instructions* on page 8-65).

20) Reconnect the 4-wire connector from the Flow Valve and the 3-wire and 5-wire connectors from the turbine to the Motor Board.

    - The connectors are keyed to fit in only one direction and will snap into place when properly connected.

21) Reconnect the Internal Battery and replace the Back Panel (see *instructions* on page 8-27).

22) Enter the Ventilator Checkout menu by powering up the ventilator while holding the Select button. Run the Display Test (see *instructions* on page 2-5). Running this display test will assist in the proper alignment of the overlay panel.

23) While running the display test, install the overlay panel on the front of the ventilator. Remove the paper backing from the top side of the membrane panel, and apply the overlay over the membrane panel. Carefully align the overlay panel with the Upper Weldment, making sure the cutout for the rotary switch is centered over the well in the Upper Weldment and that all display windows align over the corresponding openings. Press the overlay panel into place making sure the adhesive is well seated in all places.

Internal Battery Pack

Parts Required for Replacement:	Tools Required:
• Internal Battery Replacement Kit, P/N 11636, with Battery Assembly P/N 10140 and Side Seal (2) P/N 10881. **Replace if damaged:** • Grommet P/N 10541 • 1/4" Pan-head Screw (6) P/N 10435 • 1/8" Flat-head Screws (2) P/N 14498 • Battery Cover P/N 10102 • LTV® Battery Replacement Label P/N 10927 • Memory Board Secure Pad P/N 10597 • RTV Silicon Adhesive P/N 10122	• Phillips / cross tip screwdriver with torque meter • Grounded anti-static wrist strap

To remove and replace the Internal Battery pack:

1) Remove the ventilator Back Panel and disconnect the Internal Battery cable from the Power Board (see *instructions* on page 8-23).
2) Turn the Back Panel painted side up. Remove the 2 pan-head screws as shown, one from either side of the battery compartment.

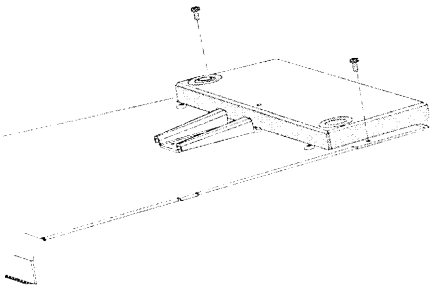

3) Flip the Back Panel over so the painted side of the panel is down.
4) Remove the 4 pan-head screws from the bottom inside flange of the battery cover and for ventilators with a current version battery cover, remove the 2 flat-head screws from the top outside flange.
5) Remove the battery cover.

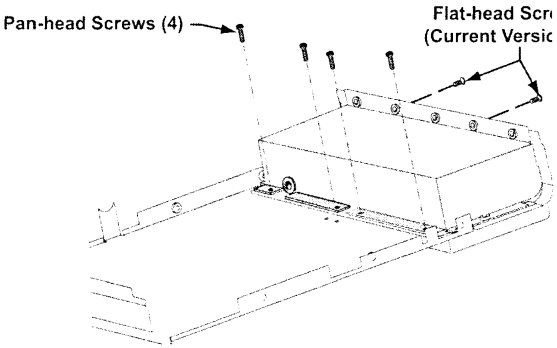

6) Remove the old Internal Battery assembly and replace it with a new one.
   - Orient the battery as shown below (fuse side up for earlier version batteries) and place it in the battery well.
   - Inspect the shrink-wrap covering the battery cables to be sure it is intact.

7) If the battery cover is of the style where the battery wires protrude through the center of the cover (see *"Earlier Version"* below), replace it with the current version battery cover (P/N 10102), where the battery wires protrude nearest the edge of the external power jack (see below).

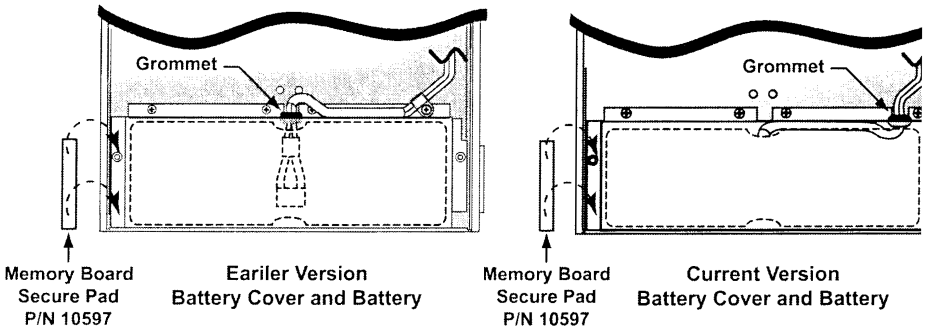

8) If not previously installed, install the battery cover Side Seals, P/N 10881 (2 halves per part number, 3 halfs required, discard unused half) as shown below; otherwise continue to the next step.

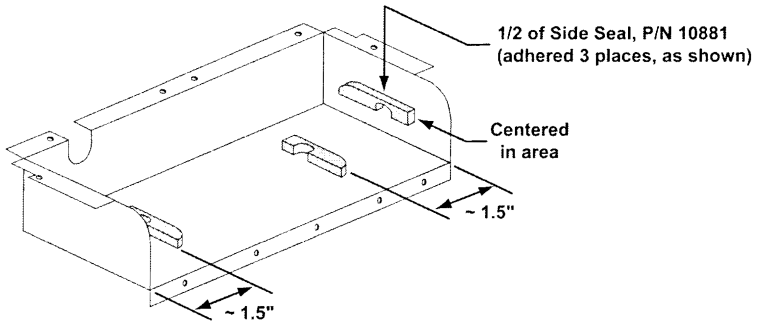

9) Remove the protective backing from the Memory Board Secure Pad (P/N 10597) and insert it between the left side of the battery cover and the edge of the bottom assembly (P/N 10104), as shown above.
   - The adhesive side of the pad should be indexed downward such that the adhesive comes in contact with the flanged edge of the battery cover.
   - For ease of assembly, the service technician may remove a small amount of pad material to clear the PEM fastener located on the battery cover. Additionally, the service technician should use a small amount of RTV silicon adhesive (P/N 10122) to bond the pad to the cover.

10) Place a LTV® Battery Replacement Label P/N 10927 on the top surface of the Battery Cover (P/N 10102). The label should be orientated such that it can be read while the service technician has the battery compartment closest to them and the flange with the grounding clips (P/N 10752) is farthest away from them.

11) Replace the battery cover, being sure the center channel of the grommet is seated in the grommet cut-out in the left side of the battery cover.

12) Visually align the threaded fasteners on the battery cover with the through holes in the back cover. Replace the 4 pan-head screws in the holes in the bottom inside flange and for current version battery covers, the 2 flat-head screws in the top outside flange. Screws should be torqued to **60 in-oz** (0.42 Nm).

13) Flip the Back Panel over and replace the two pan-head screws on either side of the battery compartment. Screws should be torqued to **60 in-oz** (0.42 Nm).

14) Reconnect the Internal Battery and replace the Back Panel (see *instructions* on page 8-27).

15) A new battery should be charged on standby for 24 hours prior to use on a patient.

16) To test a new battery, charge the ventilator for 24 hours then operate the ventilator from the battery on a test lung with the settings specified in *Appendix A - Ventilator Specifications* of the *LTV® Series Ventilator Operator's Manual*. The ventilator should operate on a new battery for a minimum of 60 minutes.

Internal Inlet Filter

The Interior Inlet Filter should be removed and cleaned every 2 years or 10,000 hours. If the filter is damaged or can not be thoroughly cleaned, it should be replaced.

Parts Required for Replacement:	Tools Required:
Replace if damaged: • Interior Inlet Filter P/N 10629	• Phillips / cross tip screwdriver with torque meter • Flat tip screwdriver or dental pick • Grounded anti-static wrist strap • Mild cleanser • Soft cleaning brush

To clean or replace the Interior Inlet Filter:

1) Remove the Back Panel of the ventilator and set it on its side beside the ventilator (see *instructions* on page 8-23).
2) Remove the internal inlet filter by lifting the edge carefully using your fingers or a flat tip screwdriver or dental pick if necessary. Use caution not to damage the edge of the filter, as it must seal against the adjacent surfaces.
3) Clean the filter using a gentle cleanser and a soft brush. Dry the filter completely.
4) Inspect the filter for damage. If the filter screen is not intact, shows signs of damage or if the edge is damaged, replace the filter with a new filter.
5) Orient the filter as shown (with the thickest foam side facing in, toward the Turbine Manifold), and install the filter by sliding it **narrow end first** in between the External Inlet Filter housing and the Turbine Manifold. The filter must seat completely so the top surface is flush with the Turbine Manifold.

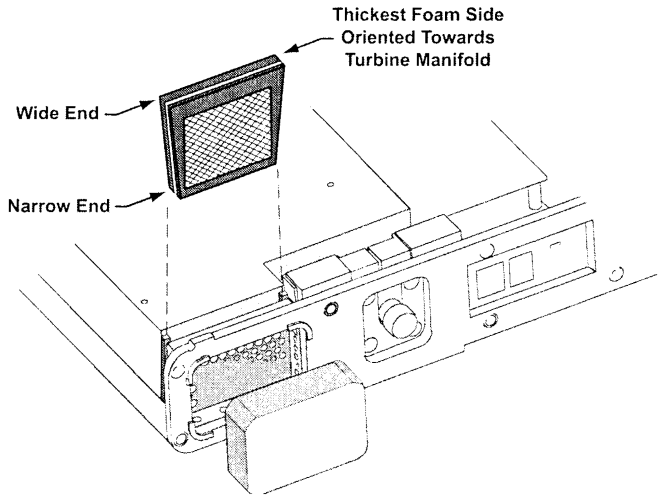

6) Reconnect the Internal Battery (if disconnected) and replace the Back Panel (see *instructions* on page 8-27).

Main Board Assembly

Parts Required for Replacement:	Tools Required:
• Main PCBA Assembly P/N 10133 **Replace if damaged:** • 1/4" Pan-head Screw (3) P/N 10435 **If not previously installed:** • LTV® Tubing Enhancement Kit (1) P/N 11684	• Phillips / cross tip screwdriver with torque meter • Grounded anti-static wrist strap

> ***Note***
>
> When ordering a replacement Main PCBA Assembly, be prepared to identify the serial number of the ventilator being serviced and the total usage hours on the unit. This will be required for programming the board prior to shipping.

To replace the Main Board:

1) Remove the Back Panel of the ventilator and disconnect the Internal Battery cable (see *instructions* on page 8-23).
2) Remove the Fan assembly (see *instructions* on page 8-42).
3) Remove the Motor Board (see *instructions* on page 8-65). The connectors to the Motor Board may be left connected.
4) Disconnect the flexible tubes from the Solenoid Manifold.

> ***Note***
>
> Prior to disconnecting or removing any of the tubes, the Internal Flexible Tube Routing Configurations table and diagrams (*see pages 8-31 through 8-34*) must be reviewed to establish and note the tube routing configuration that exists in the particular ventilator being serviced. Once established, the applicable diagram may then be referred to when reconnecting the tubes.

5) Disconnect the 2-wire Fan connector, 3-wire Flow Valve connector, 4-wire rotary switch connector, and 2-wire sounder connectors from the Power Board.
6) Remove the Sounder Assembly (see *instructions* on page 8-35).
7) Remove the Power Board (see *instructions* on page 8-73). The Analog Board may be left attached to the Power Board. Use caution: do not catch the Power Board on the Sounder Bracket while removing it.

8) Handle the ribbon cable carefully to prevent any damage to the silver contact area. **Attempting to remove the ribbon cable without opening the ZIF connector will damage the ribbon cable and may require replacing the front membrane panel.** Slide the ZIF connector on the keypad ribbon cable open and carefully remove the ribbon cable from the connector.

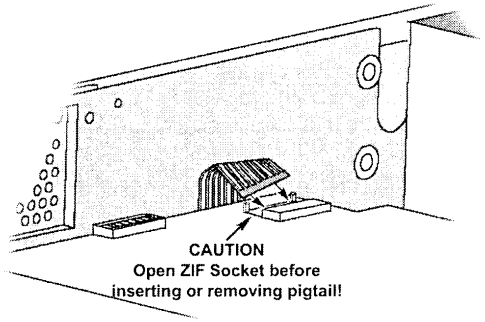

9) Remove the 3 Main Board mounting screws.

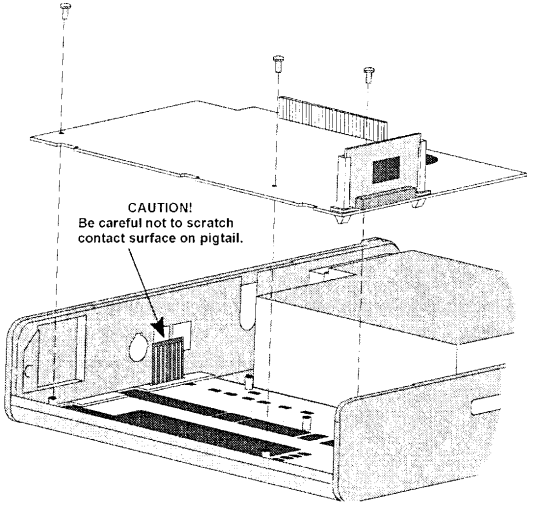

10) Hold the ribbon cable out of the way and remove the Main Board. **Use caution: do not scratch the ribbon cable with the edge of the board -** even minor scratches on the ribbon cable connections can cause the keypad connections to fail.

11) Remove the Memory Board from the Main Board (see *instructions* on page 8-63).

12) Hold the ribbon cable out of the way and install the new Main Board. **Use caution: do not scratch the ribbon cable with the edge of the board.** When the Main Board is correctly aligned, the LEDs and displays will pop into place in the cutouts ir the Upper Weldment.

13) Replace the 3 Main Board mounting screws. Screws should be torque-tightened to **60 in-oz** (0.42 Nm).

14) Open the ZIF connector on the Main Board. **Attempting to insert the ribbon cable into a closed ZIF connector will damage the ribbon cable and may require replacing the front membrane panel.** Carefully slide the keypad ribbon cable into the open ZIF connector on the Main Board. Once the ribbon cable is fully inserted, slide the ZIF connector closed.

15) Replace the Memory Board into the Main Board (see *instructions* on page 8-63).

16) Replace the Power Board, (see *instructions* on page 8-73).

17) Replace the Alarm Sounder, (see *instructions* on page 8-35).

18) Reconnect the 2-wire Fan connector, 3-wire Flow Valve connector, 4-wire rotary switch connector, and 2-wire sounder connectors to the Power Board.
    - The keyed connectors can only be installed in one direction and will snap into place when properly connected.

19) With Main Board, Power Board, and Memory Board installed, move dip switches #1 and #5 to the **ON** position and all other dip switches to the **OFF** position. Connect the AC Adapter to the Power Board. Press the **ON** button and all LEDs will be illuminated. Check the LED alignment. If any alignment is required, remove the AC power adapter then adjust the Main Board and LEDs as needed. When LEDs are aligned, set dip switches #1 and #5 to the **OFF** position.

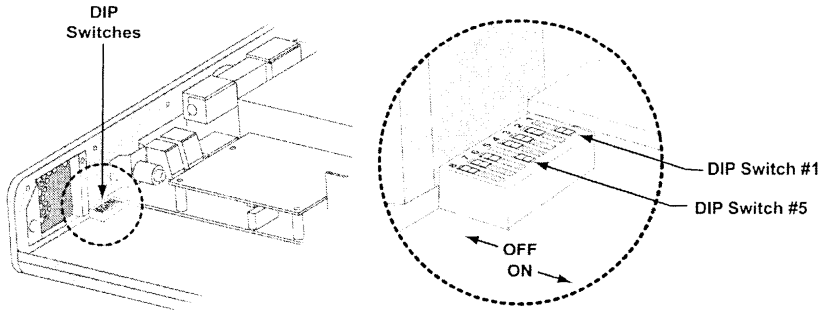

20) Reconnect the flexible tubes to the Solenoid Manifold following the internal flexible tube routing configuration/diagram previously noted (see *pages 8-31 through 8-34*). Inspect all flexible tubes for tears at the connecting ends and replace worn or damaged tubes if necessary.

21) Replace the Fan assembly (see *instructions* on page 8-42).

22) Replace the Motor Board using care to align the pass through connectors (see *instructions* on page 8-65).

23) Reconnect the 4-wire connector from the Flow Valve and the 3-wire and 5-wire connectors from the turbine to the Motor Board.

    - The keyed connectors can only be installed in one direction and will snap into place when properly connected.

24) Reconnect the Internal Battery and replace the Back Panel (see *instructions* on page 8-27).

Memory Board

The Memory Board contains the software that operates the ventilator. The Memory Board should need to be replaced only when upgrading the software to a new version. It is a generally a good practice to upgrade the ventilator software to the most current released version at the time the ventilator is being serviced. This will ensure the advantage of all new features and reliability improvements.

> ***Caution !***
>
> **Software Caution –** Never install a version of software lower than the version originally installed in the ventilator. Erroneous operation may result from the installation of an incompatible software version. Generally, LTV® ventilator software is designed to be backwards-compatible.

Parts Required for Replacement:	**Tools Required:**
• Programmed Memory PCBA Assembly P/N 10137	• Phillips / cross tip screwdriver with torque meter • Grounded anti-static wrist str

To remove and replace the Memory Board:

1) Remove the ventilator Back Panel and disconnect the Internal Battery cable from the Power Board (see *instructions* on page 8-23).

> ***Caution!***
>
> **Anti-static Precautions** - It is especially important to observe ESD (Electro Static Discharge) precautions whenever handling the Memory Board. Always wear a grounded anti-static wrist strap when handling the ventilator with the case open. Electrostatic discharge can damage the internal electronics.

2) Remove the Programmed Memory PCBA from its supporting rails by gripping the corners firmly between two fingers and pulling it out.

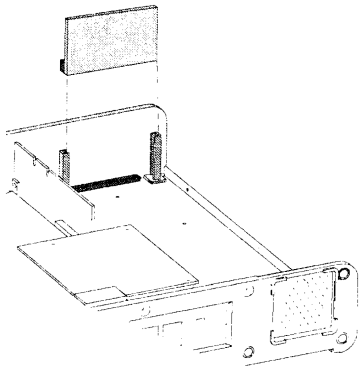

3) Current version Memory Boards are equipped with a **JP3** connector. Verify the jumper is installed in the Normal Operation position of the **JP3** connector (as shown), prior to installing the Memory Board.

4) Install the new Memory Board by lining the edges up in the supporting rails and sliding it into position. Be sure the connector on the Memory Board is oriented correctly to line up with the mating connector on the Main PCBA. Press the board in place until the connectors are firmly seated.

JP3 Jumper Installed for Normal Operation

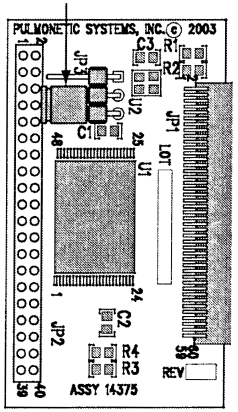

5) Reconnect the Internal Battery and replace the Back Panel (see *instructions* on page 8-27).

6) To verify the new software version, power up the vent and enter the Extended Features menu. Select **VENT OP** and rotate the knob until the **VER** string is displayed. Verify that the version string displayed matches the version of the newly installed software on the Memory Board.

7) After upgrading the LTV® software version, check each of the LTV® configuration settings (see *Configuration*, page 6-32).

8) Upgrading to certain versions of LTV® software will require recalibration of the LTV® ventilator. Check the LTV® calibration, and recalibrate if necessary (see *Calibration*, page 6-6).

Motor Board Assembly

Parts Required for Replacement:	Tools Required:
• Motor PCBA Assembly P/N 10135 **Replace if damaged:** • 7/16" Pan-head Screw (4) P/N 10433	• Phillips / cross tip screwdriver with torque meter • Grounded anti-static wrist strap

To replace the Motor Board:

1) Remove the Back Panel of the ventilator and disconnect the Internal Battery cable (see *instructions* on page 8-23).
2) Disconnect the 4-wire connector from the Flow Valve and the 3-wire and 5-wire connectors from the turbine.
3) Remove the 4 Motor Board mounting screws.
4) Pull the motor straight up and off the mating Power PCBA connectors. Use care to pull the Motor Board up evenly and without rocking side to side or bending the Power PCBA connector pins.
   - For ventilators previously equipped with a Power Connector Shield Assembly (P/N 11536), bend the wires from the shield out of the way to remove the Motor Board.

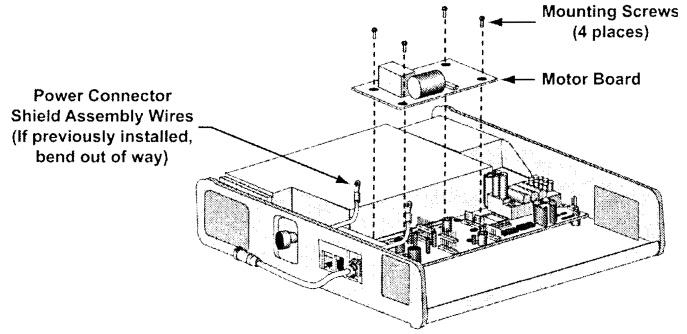

5) For ventilators previously equipped with a power connector shield assembly, temporarily loosen the 2 flat-head screws in the side panel and remove the shield by pulling it straight up and out of the ventilator. Discard the shield (it is not to be reinstalled) and torque-tighten the screws to **60 in-oz** (0.42 Nm).

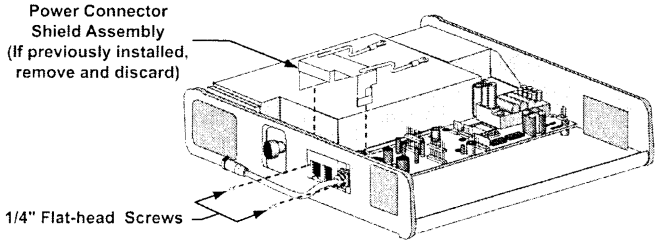

6) Verify the Power PCBA mating connector pins are straight and install the new Motor PCBA by placing it on the four threaded stand-offs on the Power PCBA, orientated so that the connector pins on the Power PCBA are indexed into the mating connecto holes in the Motor PCBA.

   Using finger pressure, press straight down on the Motor PCBA directly above the pins and mating connectors for the Power PCBA. The Motor PCBA should seat on the Power PCBA so that the pins on the Power PCBA visibly protrude through the top of the connector on the Motor PCBA.

7) Insert and thread four screws (P/N 10433, 7/16" pan-head) into the mounting holes ir the Motor PCBA and torque-tighten to **60 in-oz** (0.42 Nm).

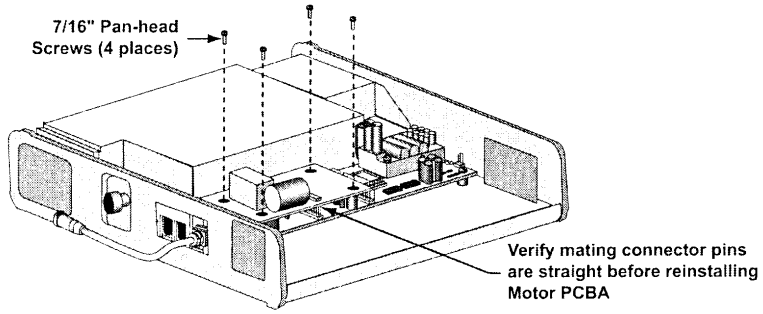

8) Reconnect the 4-wire connector from the Flow Valve and the 3-wire and 5-wire connectors from the turbine.
   - The connectors are keyed to fit in only one direction and will snap into place when properly connected.

9) Reconnect the Internal Battery and replace the Back Panel (see *instructions* on page 8-27).

O_2 Blender Assembly / O_2 Inlet Block

Parts Required for Replacement:	Tools Required:
• O_2 Blender Assembly P/N 10051 or O_2 Inlet Block P/N 10639 • Cable Tie P/N 10466 • O_2 Donut Seal P/N 10603 • Silicone Gel Lubricant P/N 10123[60] **Replace if damaged:** • Thermo Conductive Pad P/N 10129 • Sealing Gasket P/N 10175 • Damping Grommets (4) P/N 10266 • Grounding Clips (4) P/N 10752 **If Not Previously Installed:** • 1 7/8" Black colored Pan-head Screws (4), P/N 10918B • LTV® Tubing Enhancement Kit (1), P/N 11684	• Phillips / cross tip screwdriv with torque meter • Grounded anti-static wrist s • Small dykes or cutters • Mild cleanser • Cable tie tool • RTV Silicone Adhesive • Flow Valve Insertion Tool (Mylar) P/N 14206

Some models of the LTV® Series Ventilator have an Oxygen Blender, other models do not offer active blending and contain an oxygen Inlet Block instead. These instructions apply to both the O_2 Blender assembly and the O_2 Inlet block. Differences between the two methods are covered in each step.

When replacing the O_2 Blender assembly, it is easiest to remove several components and replace them together. These will be done in the following order:

- Remove the Back Panel and disconnect the battery.
- Remove the left soft side.
- Remove the Motor Board.
- Remove the Flow Valve.
- Remove the Turbine Manifold and Oxygen Blender as a unit.
- Disconnect the Oxygen Blender from the Turbine Manifold.
- Connect the new Oxygen Blender to the Turbine Manifold.
- Replace the Oxygen Blender and Turbine Manifold as a unit.
- Replace the Flow Valve.
- Replace the left soft side.
- Reconnect the battery and replace the Back Panel.

1) Remove the Back Panel and disconnect the battery (see *instructions* on page 8-23).
2) Remove the left soft side (see *instructions* on page 8-87).
3) Remove the Motor Board (see *instructions* on page 8-65).
4) Remove the Flow Valve (see *instructions* on page 8-45).

[60] In the European Union. Loctite® 8104 may be substituted as an equivalent compound.

To remove the Turbine Manifold and Oxygen Blender:

1) Disconnect the O_2 Blender's 8-wire connector from the Power Board (Blender only).
2) Disconnect the O_2 tube from the oxygen pressure transducer on the Analog Board (Blender only).
3) Disconnect the turbine's 3-wire and 5-wire connectors from the Motor Board.
4) Disconnect the bypass tubing from the connector at the base of the Turbine Manifold.
5) Remove the 4 screws labeled **MANIFOLD SCREW** from the Turbine Manifold.
6) Remove the 4 Blender mounting screws and metal washers from the outside of the ventilator.
7) Remove the Oxygen Blender, Turbine Manifold and Interior Inlet Filter. Use care not to remove the grounding straps and grommets that are between the Oxygen Blender and the side of the ventilator case.

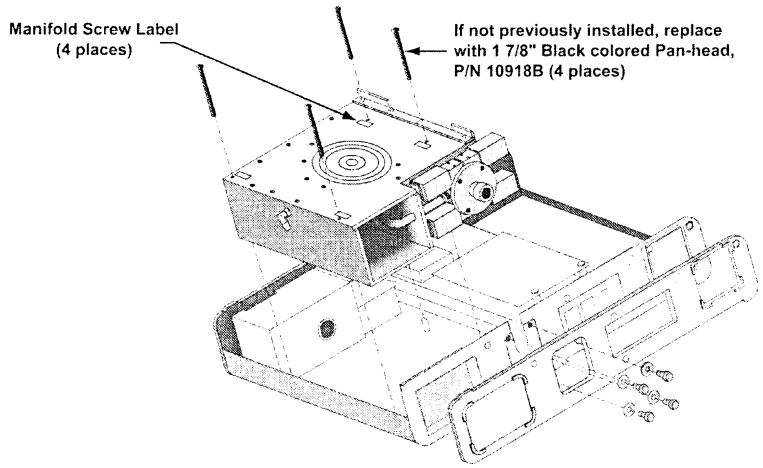

8) The Thermo Conductive Pad beneath the turbine may adhere to the turbine when it is removed, or may remain attached to the case. If the Thermo Conductive Pad remains attached to the case, check it for damage or hardening and replace it if necessary. If the Thermo Conductive Pad comes out with the turbine, replace it with a new pad.

To replace the thermo conductive pad:

1) Peel the Thermo Conductive Pad off.
2) If there is any adhesive residue left on the inside of the Upper Weldment or the turbine assembly, remove it by washing with a mild cleaner.
3) Remove the protective backing from the smooth side of the new Thermo Conductive Pad and center it on the turbine surface.
4) Remove the protective cover from the Thermo Conductive Pad.

To connect the Turbine Manifold to the new Oxygen Blender:

1) Handle the manifold and Blender carefully so as not to break the silicone seal around the oxygen tube entering the manifold. If this seal is damaged, repair with RTV silicone adhesive.
2) Cut the cable tie that is holding the tube connection to the Oxygen Blender or oxygen bleed-in block. Separate the Oxygen Blender and Turbine Manifold.
3) Make a loose loop with a cable tie and slide it over the tube that connects the Turbine Manifold to the Oxygen Blender. Connect the tube to the barbed fitting on the Oxygen Blender.
4) Using a cable tie tool, tighten the cable tie to 1 tension. The cable tie tool should trim the tail off close to the connector.

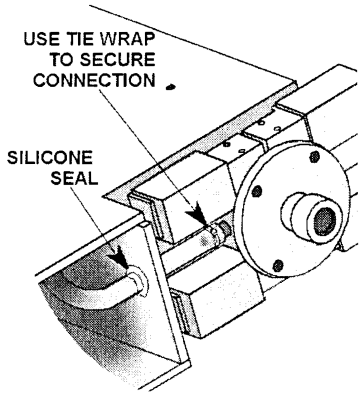

To install the Turbine Manifold and Oxygen Blender:

1) Slide the Turbine Manifold and Oxygen Blender into place. Be sure not to catch any tubing or wiring under the manifold while it is being installed.

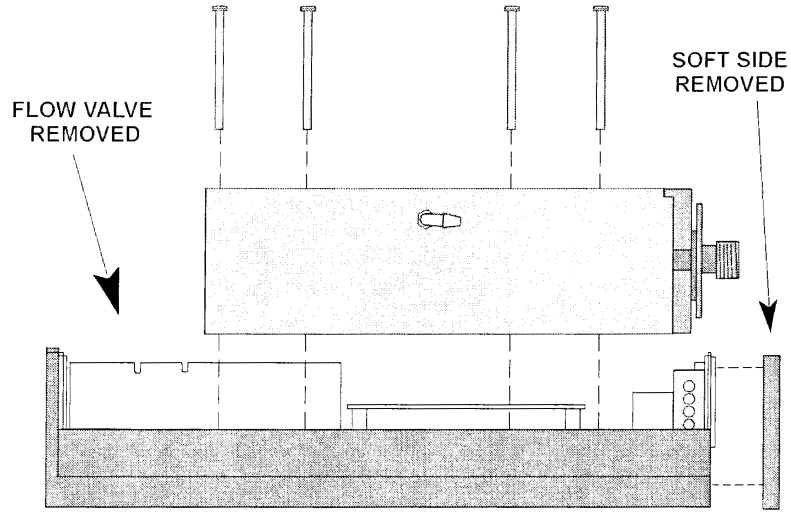

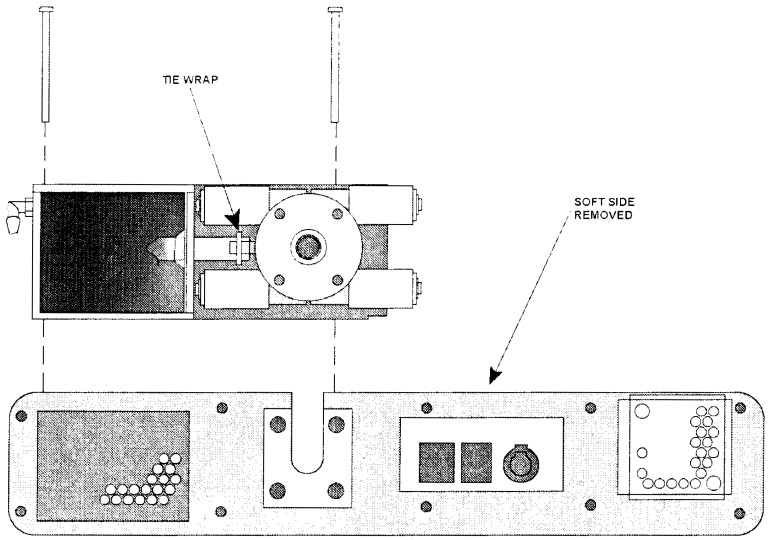

2) Replace the 4 screws into the Turbine Manifold. Screws should be torqued to **20 in-oz** (0.14 Nm).

   - If not previously installed, replace with 1 7/8" Black colored pan-head screws (4), P/N 10918B.

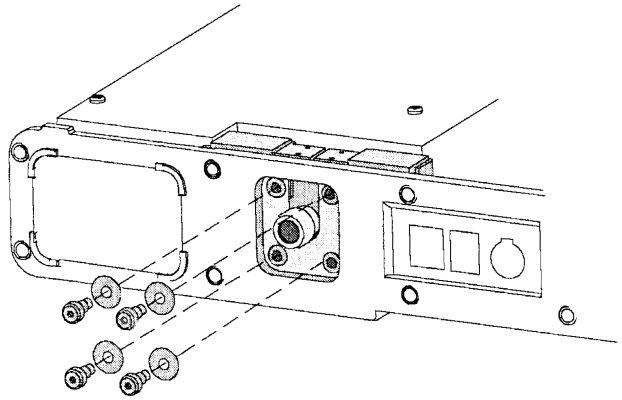

3) Check the rubber grommets and grounding clips on the Oxygen Blender mounting for wear and replace if necessary. Replace the 4 Blender mounting screws and metal washers. Use a straight edged screwdriver or pick to prevent each of the clips from turning as of the screws are tightened. Screws should be torqued to **60 in-oz** (0.42 Nm). The clips should be positioned so the folded edge is oriented up and parallel with the back of the ventilator. If the upper clips are not aligned with the edge of the side panel, the Back Panel of the ventilator will not seat correctly.

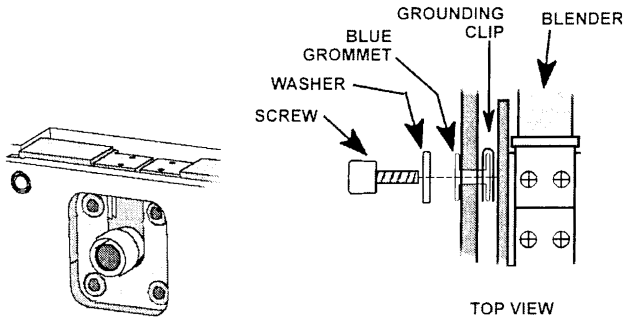

4) Lay the wire / tubing bundle from the Blender along the side of the Turbine Manifold on top of the Power Board between the Motor Board connector standoffs and the side of the manifold. Press the O_2 tube from the Blender into the barrel connector to the oxygen transducer located on the Analog Board. The tube should seat in approximately 1/2" and should not be easily removable. If the tube is not inserted completely, it will disconnect when a high pressure oxygen source is connected.

5) Connect the 8-wire connector from the Oxygen Blender to the Power Board.

   - The connector is keyed to fit in only one direction and will snap into place when properly connected.

6) Tuck the wrapped wires and oxygen tube down along the side of the Turbine Manifold against the Power Board.

7) Replace the Motor Board (see *instructions* on page 8-65).

8) Connect the 3-wire and 5-wire connectors from the turbine to the Motor Board.

   - The connectors are keyed to fit in only one direction and will snap into place when properly connected.

9) Inspect the orange seal on the side of the Flow Valve. If it is damaged, remove and replace it with a new seal as follows: Peel the old seal off the Flow Valve. Remove any old adhesive from the Flow Valve using a mild detergent and dry the valve side. Remove the protective backing from the Flow Valve seal and press it into place.

10) Replace the Flow Valve (see *instructions* on page 8-45).

11) Connect the bypass tubing from the Flow Valve to the barbed elbow at the bottom of the Turbine Manifold. The tubing should be looped into the space between the bottom of the manifold and the bottom edge of the Upper Weldment so that it is out of the way and will not be pinched when the back of the ventilator is replaced.

12) Replace the internal inlet filter (see *instructions* on page 8-58).

13) Replace the left soft side (see *instructions* on page 8-87).

14) Reconnect the Internal Battery and replace the Back Panel (see *instructions* on page 8-27).

O_2 Blender Filter

The O_2 inlet filter should be removed and cleaned every 10,000 hours or 2 years of service. If the ventilator is being operated with a low grade or contaminated O_2 source, the O_2 inlet filter may need to be cleaned or replaced more often. If the filter is damaged or cannot be thoroughly cleaned, it should be replaced.

Parts Required for Replacement:	**Tools Required:**
Replace if damaged: • Oxygen Blender Filter P/N 14313 • O-Ring P/N 10609	• Dental pick • Mild cleanser • Soft cleaning brush

To clean or replace the O_2 inlet filter:

1) If a high pressure O_2 source is being used, disconnect the high pressure O_2 hose from the oxygen block on the left side of the ventilator.
2) If a low pressure O_2 source is being used, disconnect the O_2 line from the barbed oxygen adapter. Unscrew and remove the barbed adapter from the oxygen block on the left side of the ventilator.

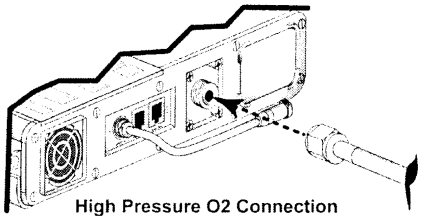

High Pressure O2 Connection

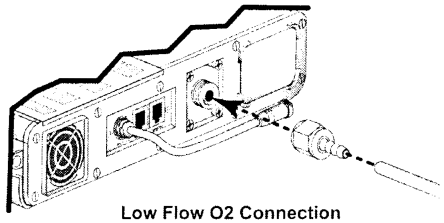

Low Flow O2 Connection

3) Using a pick, remove the rubber O-ring from inside the O_2 inlet port. Use caution: do not damage the O-ring while removing it. Tip the ventilator to allow the O_2 inlet filter to slide out.

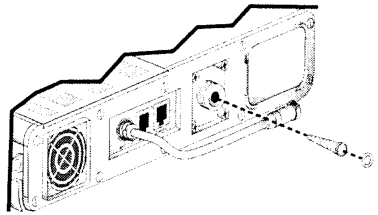

4) Clean the filter using a mild cleanser, warm water and a soft brush. Rinse the filter thoroughly to remove all traces of the cleanser. Allow the filter to dry completely before replacing it in the ventilator.
5) Inspect the filter for damage. If the filter is not intact, shows signs of damage or cannot be completely cleaned, replace it with a new filter and O-ring.
6) Replace the filter by sliding it back into the O_2 inlet port. Replace the O-ring, making sure it is completely tucked under the retaining lip on the inside of the O_2 inlet port.
7) Reconnect the high pressure O_2 line or the barbed adapter and low pressure O_2 line.

Power Board Assembly

Power Port DC Cord Pigtail Assemblies are installed on all current versions of LTV® ventilators. Earlier version ventilator Power PCBA assemblies (P/N 10134) being serviced need to be replaced with a current version Power PCBA assembly and related hardware to accommodate this feature. :

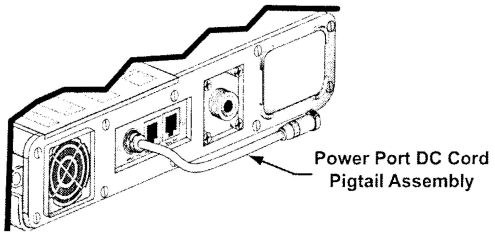

Pulmonetic Systems Power Board Replacement Kits:

When a LTV® Series Ventilator Power Board is to be replaced, be aware that Pulmonetic Systems offers three different Power Board Replacement Kits. Review the information shown below to identify which Power Board Kit would be appropriate for the specific ventilator being serviced.

> ***Note***
> Pulmonetic Systems requires the LTV® Ventilator software be upgraded to version 3.13 or greater when installing Power Board P/N 15000.

- **P/N 14157 - Power PCBA Replacement Kit:**
  This kit is required if the unit being serviced has a Pigtail Cable Assembly installed and the technician has the equipment necessary to upgrade the Memory Board software. It contains the Power Board (P/N 15000) and replacement hardware.
- **P/N 14425 - Power PCBA w/Memory Board Replacement Kit:**
  This kit is required if the unit being serviced has a Pigtail Cable Assembly installed and the technician does not have the equipment necessary to upgrade the Memory Board software. It contains the Power Board (P/N 15000), replacement hardware and;
  - Programmed Memory Board
  - LTV® Tubing Enhancement Kit
- **P/N 11590 - Power PCBA w/DC Cord Replacement Kit:**
  This kit is required if the unit being serviced does not have a Pigtail Cable Assembly installed and the technician does not have the equipment necessary to upgrade the Memory Board software. It contains the Power Board (P/N 15000), replacement hardware and;
  - Pigtail Cable Assembly and Interface Bracket
  - Programmed Memory Board
  - LTV® Tubing Enhancement Kit

Parts Required for Replacement:	Tools Required:

• Power PCBA Replacement Kit (P/N 14157, 14425 or 11590):
  • P/N 11498 - Pigtail Cable Assembly[61] (1)
  • P/N 11514 - Electrical Connector Interface Bracket[61] (1)
  • P/N 10137 - Memory PCBA, Programmed[61 & 62] (1)
  • P/N 11684 - LTV® Tubing Enhancement Kit[61 & 62] (1)
The following parts are contained in all Power Board Replacement Kits:
  • P/N 14429 - LTV® Ventilators Operator's Manual Addendum 1
  • P/N 15000 - Power Board (1)
  • P/N 11543 - 3/16" Hex Standoffs (2)
  • P/N 14372 – 3/16" 4-40 Pan-head Screw (2)
  • P/N 10433 - 7/16" 4-40 Pan-head Screw (2)
  • P/N 10607R - 7/8" 4-40 Red Pan-head Screw (1)
  • P/N 10435G - 1/4" 4-40 Green Pan-head Screw (2)
  • P/N 10342 - 1/4" 4-40 Hex-Nut (1)
  • P/N 14391 - Label, Temporary, LTV® Chirp (1)
  • P/N 14392 - Label, LTV® Chirp (1)
	• Grounded anti-static wrist strap
	• Philips-head screwdriver
	• P/N 11599 – Power PCB Separator[63]
	• 3/16" Nut Driver adapter f torque wrench
	• 1/4" Nut Driver adapter fo torque wrench
	• Torque wrench (20 in-oz / 0.14 Nm to 60 in-oz / 0.42 Nm range)

To replace the Power PCBA and DC Cord Pigtail related hardware

WARNING !

Mounting Screw Use – Use care to assure the correct length mounting screws are used as specified in the instructions or internal damage to the ventilator may result.

1) Remove the Back Panel of the ventilator and disconnect the Internal Battery cable (see *instructions* on page 8-23).

2) Remove the Motor Board by removing the four 7/16" pan-head mounting screws (retain for reinstallation). Move the Motor Board out of the way. The connectors to the Motor Board may be left connected.

   • For ventilators previously equipped with a Power Connector Shield Assembly, bend the wires from the shield out of the way to remove the Motor Board.

---

[61] Contained in Pulmonetic Systems Power PCBA w/DC Cord Replacement Kit, P/N 11590

[62] Contained in Pulmonetic Systems Power PCBA w/Memory Board Replacement Kit. P/N 14425

[63] The Power PCB Separator tool is available separately, or as part of the Maintenance Calibration Kit, P/N 11566.

3) Disconnect the flexible tubes from the right edge of the Solenoid Manifold.

> ***Note***
>
> Prior to disconnecting or removing any of the tubes, the Internal Flexible Tube Routing Configurations table and diagrams (*see pages 8-31 through 8-34*) must be reviewed to establish and note the tube routing configuration that exists in the particular ventilator being serviced. Once established, the applicable diagram may then be referred to when reconnecting the tubes.

4) Disconnect the 2-wire Fan connector, 3-wire Flow Valve connector, 4-wire Rotary Switch connector, 8-wire O2 Blender, and 2-wire Sounder connectors from the Power PCBA.

5) Remove the two screws that attach the Analog Board to the Power PCBA and move the Analog Board out of the way (see *instructions* on page 8-39).

6) For ventilators equipped with a Battery Cache Board mounted on an earlier version Power Board, remove the Battery Cache Board mounting screw; otherwise proceed to the next step.

7) Remove the Alarm Sounder (see *instructions* on page 8-35).

8) Remove the Power PCBA mounting screws (2 screws attach the Power Board and/or the Pigtail Cable assembly to the Side Panel from the outside (retain) and the balance are located on the face of the board). See *illustration* below.

   - For ventilators previously equipped with a Power Connector Shield Assembly, remove and discard the shield by pulling it straight up and out of the ventilator.

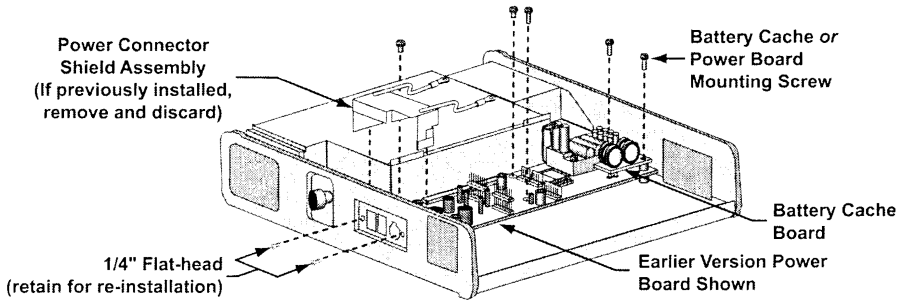

- For ventilators equipped with a Pigtail Cable Assembly;
  - The Electrical Connector Interface bracket is not connected to the Power PCBA and is to be removed by pulling it straight up and off the Power PCBA connectors and the molded strain relief portion of the Pigtail Cable Assembly.
  - Disconnect the 4-wire Pigtail Cable Assembly connector from the **JP6** mating connector on the Power PCBA and slide the Pigtail Cable Assembly out of the keyed-round hole of the Upper Weldment and set aside.

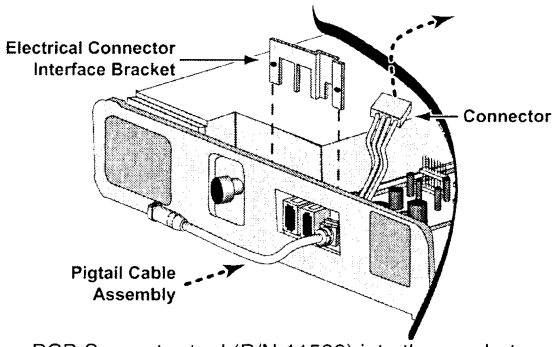

9) Insert a Power PCB Separator tool (P/N 11599) into the gap between the edge of the Power PCBA and the Turbine Manifold, at the approximate mid-point of the 64-pin connector (see ***Detail*** *illustration* below).
   - The tool may need to be moved left or right along the gap to obtain initial insertion.
   - Position the back surface of the lower portion of the tool against the Turbine Manifold with the lowest edge of the tool resting on the Main PCBA below the Power PCBA. Hold the lower portion of the tool against the Turbine Manifold and rotate the handle backwards and down toward the top surface of the Turbine Manifold to separate the Power and Main PCBA mating connectors (see ***Cut-away*** *illustration* below).

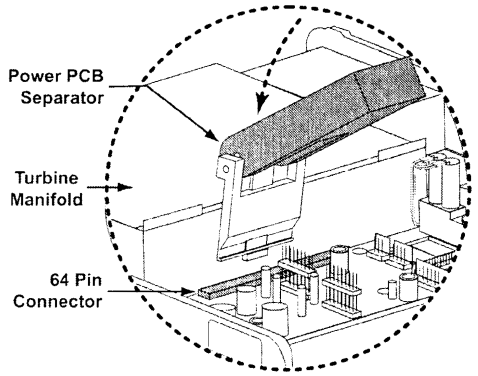

Detail

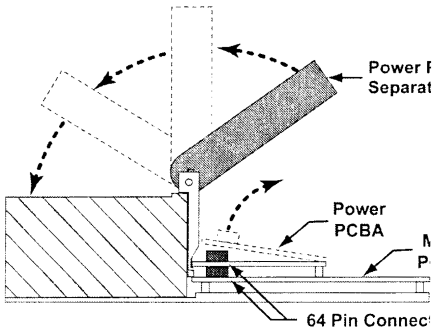

Cut-away

10) Remove the Power PCBA, flexing the left side panel slightly out of the way.

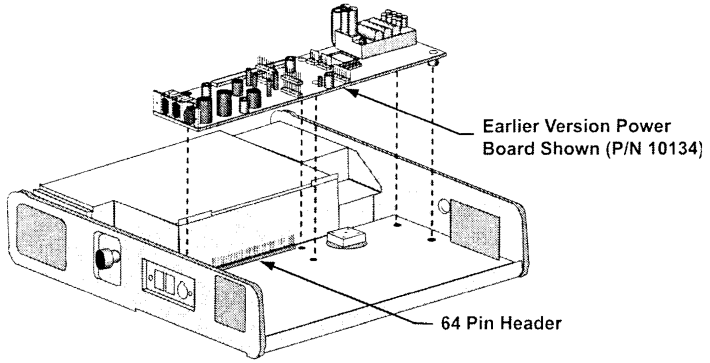

11) Disconnect the two 2-wire connectors from the solenoids and remove the remaining mounting screw (used with earlier version Power Boards) ***or*** mounting nut (used with current version Power Boards) from the Solenoid Manifold.
    - Earlier version LTV® 800 ventilators do not have the 2-wire connectors on the Power PCBA or a purge solenoid on the Solenoid Manifold assembly.

12) Remove the Solenoid Manifold from the Power PCBA.

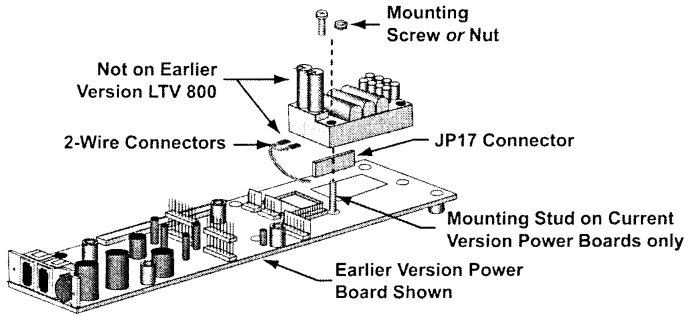

13) If not previously installed, insert and thread two 3/16" Hex Standoffs (P/N 11543) into the holes on the Main PCBA on each side of the 64-pin header and torque-tighten to **60 in-oz** (0.42 Nm); otherwise proceed to the next step.

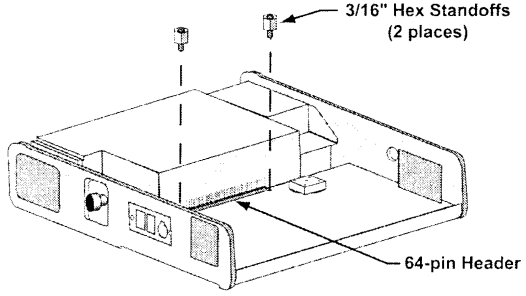

14) When reinstalling an earlier version Power PCBA (P/N 11511), align the Solenoid Manifold[64] leads with the **JP17** connector on the Power PCBA being installed and press the Solenoid Manifold into place.

    When installing a current version Power PCBA (P/N 15000), slide the Solenoid Manifold[64] over the threaded mounting stud on the Power Board, align the solenoid leads with the **JP17** connector on the Power Board being installed and press the Solenoid Manifold into place.

15) When reinstalling an earlier version Power PCBA (P/N 11511), insert one 5/8" Yellow colored pan-head mounting screw (P/N 10437Y) into the Solenoid Manifold as shown in the illustration below, torque tighten to **20 in-oz** (0.14 Nm) and reconnect the two 2-wire connectors to the Solenoid leads.

    When installing a current version Power PCBA (P/N 15000), thread one 1/4" Solenoid Manifold Mounting Nut (P/N 10342) onto the Power Board mounting stud protruding through the Solenoid Manifold (as shown in the illustration), torque-tighten to **20 in-oz** (0.11 Nm) and reconnect the two 2-wire connectors to the solenoid leads.

    - Over tightening of the mounting screw or nut may result in leaks on the Solenoid Manifold.
    - 2-wire connectors orientation does not matter and only one connector is used on the LTV® 800).

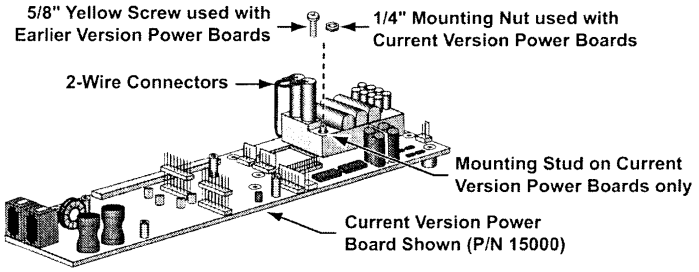

16) Place the Power PCBA over the Main PCBA such that the two external connector fittings align with the two square holes in the side of the Upper Weldment and the 64-pin female connector is aligned with the 64-pin male connector on the Main PCBA (see illustration on next page).

---

[64] LTV® 1000, 950 and 900 use Solenoid Manifold Assembly P/N 10710. LTV® 800 ventilators use Solenoid Manifold Assembly P/N 14125 in combination with Power PCBA P/N 11511 and software version 3.12 or higher ***or*** Power PCBA P/N 15000 and software version 3.13 or higher.

17) Attach the Power PCBA to the Main PCBA by pressing down directly on the **JP12**, 64-pin header.
    - The Power PCBA should seat on the Main PCBA such that the pins on the Main PCBA are visible through the top of the connector on the Power PCBA.

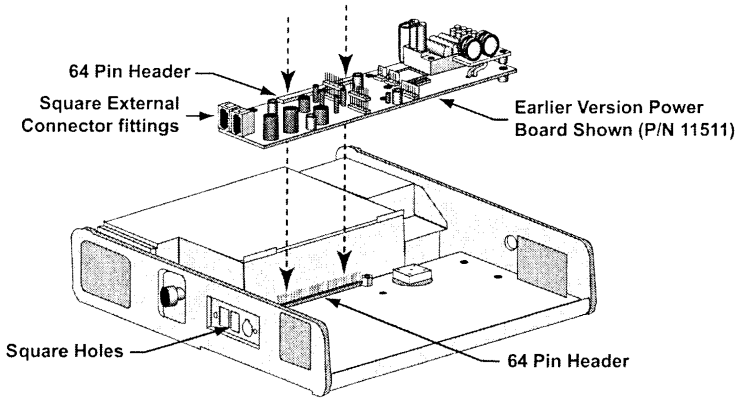

18) Insert and thread two 3/16" pan-head screws (P/N 14372) or if previously installed, 1/8" pan-heads through the Power PCBA into the standoffs on either side of the 64-pin female connector on the Power PCBA. Torque-tighten to **60 in-oz** (0.42 Nm).

19) When reinstalling an earlier version Power PCBA (P/N 11511 with attached Battery Cache PCBA), insert and thread one 7/16" pan-head screw (P/N 10433) into the mounting hole closest **U16** on the Power PCBA and torque-tighten to **60 in-oz** (0.42 Nm).
    - Do not screw the Battery Cache PCBA into place onto the Power PCBA at this time.

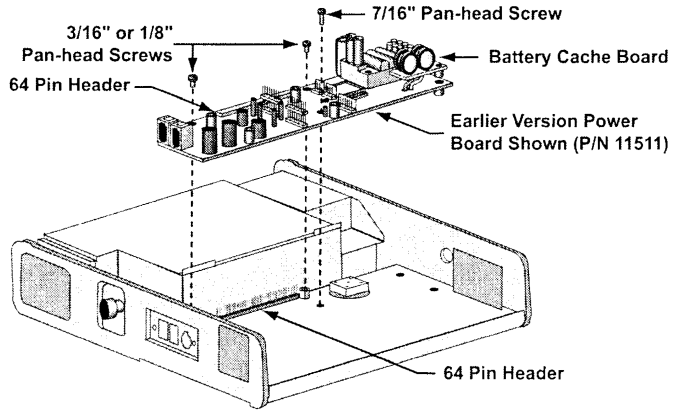

20) When installing a current version Power PCBA (P/N 15000), insert and thread two 7/16" pan-head screws (P/N 10433). One into the mounting hole closest **U16** on the Power Board and one into the mounting hole nearest the Sounder location. Torque-tighten both screws to **60 in-oz** (0.42 Nm).

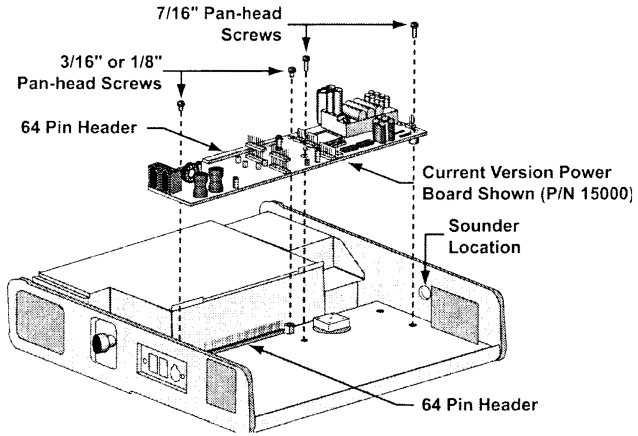

21) For earlier or current version Power Board installation, insert a 7/8" Red colored pan-head Solenoid Manifold mounting screw (P/N 10607R), as shown in the illustration below, and torque-tighten to **20 in-oz** (0.14 Nm).

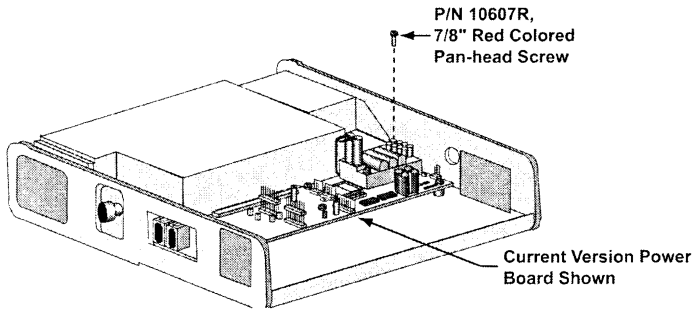

22) Orient the Pigtail Cable Assembly so the grooved side of the molded strain relief is facing up, as shown below.

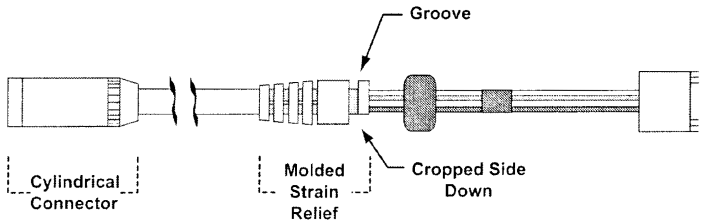

Pigtail Cable Assembly

23) Insert the cylindrical connector-end of a Pigtail Cable Assembly over the Power PCBA and through the keyed-round hole of the Upper Weldment from the inside of the Upper Weldment.
    - Slide the pigtail cable assembly through the hole in the Upper Weldment until the strain relief on the pigtail cable assembly protrudes through the keyed-round hole in the Upper Weldment.

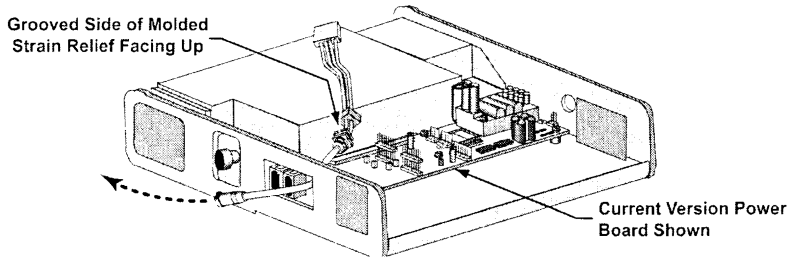

24) Slide the Electrical Connector Interface Bracket down through the recess in the molded strain relief of the pigtail cable assembly.

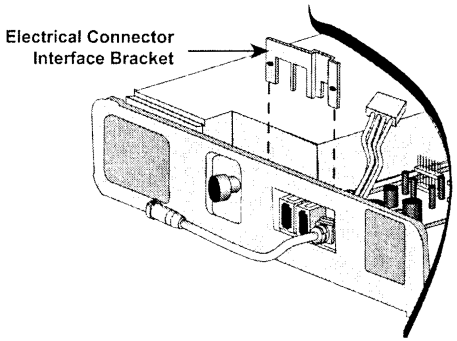

25) Insert and thread two 1/4" flat-head screws (P/N 10430) through holes in the left sidewall of the Upper Weldment and into the threaded bosses on the electrical connector interface bracket. Torque-tighten both screws to **60 in-oz** (0.42 Nm).

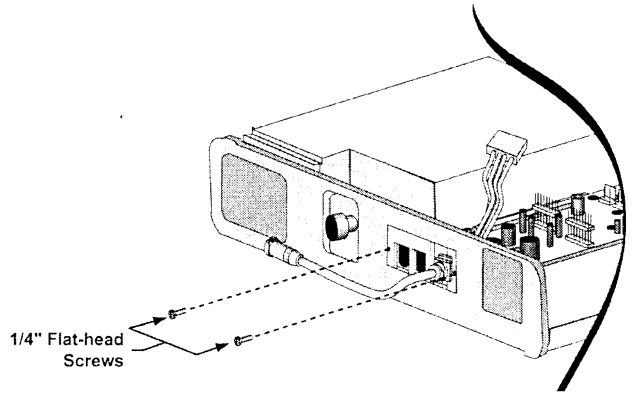

26) Plug the 4-wire connector of the pigtail cable assembly onto the **JP6** connector on the Power PCBA.
    - When reinstalling Power Board P/N 11511, fold the wires of the pigtail cable assembly back toward the area for the Turbine Manifold assembly.
    - When installing Power Board P/N 15000, fold the wires of the pigtail cable assembly back toward the cavity for the Internal Battery.

27) Verify the Power Board mating connector pins are straight and place the Motor PCBA on the four threaded stand-offs on the Power PCBA and orientated such that the connector pins on the Power PCBA are indexed into the matching connector holes in the Motor PCBA.

    Using finger pressure, press down on the Motor PCBA at the location directly above the pins and connector for the Power PCBA.
    - The Motor PCBA should seat on the Power PCBA such that the pins on the Power PCBA visibly protrude through the top of the connector on the Motor PCBA.

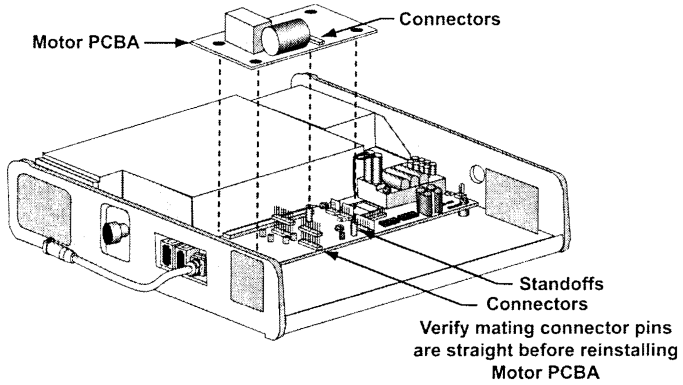

28) Insert and thread four 7/16" pan-head screws (P/N 10433) into the mounting holes in the Motor PCBA and torque-tighten to **60 in-oz (0.42 Nm).**

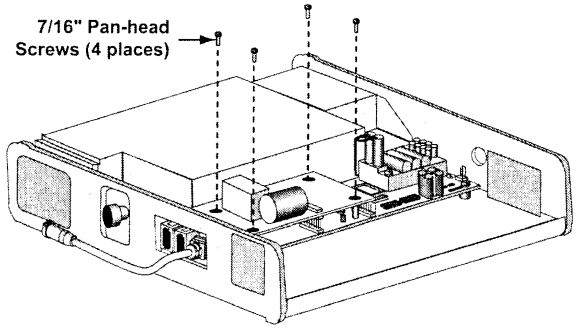

29) Replace the Alarm Sounder, (see *instructions* on page 8-35).

30) When reinstalling Power Board P/N 11511, align the Battery Cache PCBA directly over the Power PCBA so its standoff is directly in line with the mounting hole nearest **U28** on the Power PCBA. Insert and thread one 3/4" pan-head screw into the mounting hole through the Battery Cache and Power PCBA's and torque-tighten to **60 in-oz** (0.42 Nm).

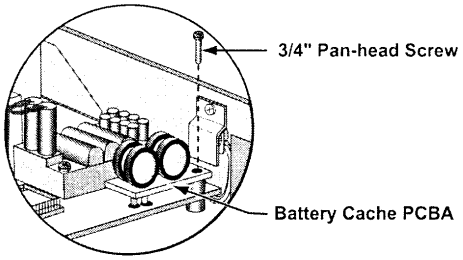

31) Reconnect the 2-wire Fan connector, 3-wire Flow Valve connector, 4-wire rotary switch connector, 8-wire O_2 Blender, and 2-wire sounder connectors to the Power PCBA.
    - The connectors are keyed to fit in only one direction and will snap into place when properly connected.

32) Replace the Analog Board and install two 1/4" Green colored pan-head mounting screws (P/N 10435G). Torque-tighten to **60 in-oz** (0.42 Nm).

33) Reconnect the flexible tubes to the Solenoid Manifold following the internal flexible tube routing configuration/diagram previously noted (see *pages 8-31 through 8-34*).
    - Inspect all flexible tubes for tears at the connecting ends and replace worn or damaged tubes if necessary.\

34) Reconnect the 4-wire connector from the Flow Valve and the 3-wire and 5-wire connectors from the turbine.
    - The connectors are keyed to fit in only one direction and will snap into place when properly connected.

35) Reconnect the Internal Battery and replace the Back Panel (see *instructions* on page 8-27).

36) When installing Power Board P/N 15000 and if not previously applied, apply a Temporary Label, LTV® Chirp[65] (P/N 14391) to the front side of the ventilator (see illustration on next page).
    - Wipe the surface of the area where the label is to be applied, with a clean, damp cloth and allow to dry.
    - Remove the label backing and press the label onto the front side of the ventilator, in the approximate location shown below.
    - This is a removable label and if desired, may be removed by the ventilator owner/operator.

---

[65] Contained in Pulmonetic Systems Power PCBA Replacement Kits, P/N 14157, P/N 14425 and P/N 11590.

37) When installing Power Board P/N 15000 and if not previously applied, apply a LTV® Chirp Label[66] (P/N 14392) to the back side of the ventilator.
   - Wipe the surface of the area where the label is to be applied, with a clean, damp cloth and allow to dry.
   - Remove the label backing and press the label onto the back side of the ventilator, in the approximate location shown below.
   - This is a permanent label and is not to be removed.

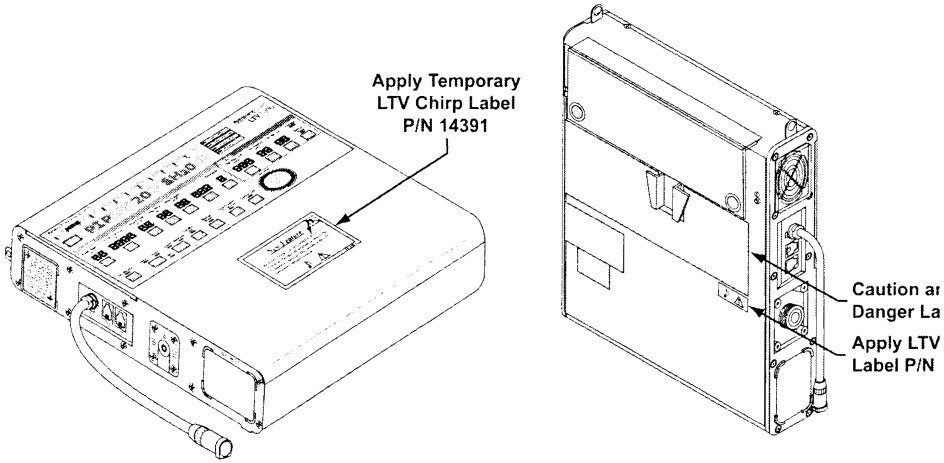

Front Side of Ventilator **Back Side of Ventilator**

38) When installing Power Board P/N 15000, include the LTV® Ventilators Operator's Manual Addendum[66] (P/N 14429) with the unit when returned to the end user to clarify the enhancements and verification test procedures insuring proper functioning of the alarm system.

[66] Contained in Pulmonetic Systems Power PCBA Replacement Kits, P/N 14157, P/N 14425 and P/N 11590.

Power Board Fuse

Earlier version Power Boards P/N 10134 (not Power Port Pigtail Cable Assembly compatible) and Power Board P/N 11511 (Power Port Pigtail Cable Assembly compatible) contain a replaceable Power Board fuse. The fuse for the current version Power Board (P/N 15000) is not replaceable.

Parts Required for Replacement:	Tools Required:
• Power Board Fuse P/N 14314	• Phillips / cross tip screwdriver with torque meter • Fuse Removal / Installation tool, P/N 14316[67] • Grounded anti-static wrist strap

To replace the fuse on an earlier version Power Board:

1) Remove the Back Panel of the ventilator and disconnect the 2-wire Internal Battery cable connector (see *instructions* on page 8-23).
2) Remove the Power PCBA Fuse from the fuse clips.
   - For ventilators with earlier version Power PCBA P/N 10134, insert the removal end of the Fuse Removal / Installation tool between the Power PCBA coil and the glass portion of the fuse (slight force may be required). Pull the fuse up and out of the fuse clips.

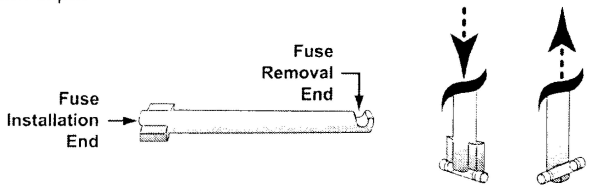

Fuse Removal / Installation Tool

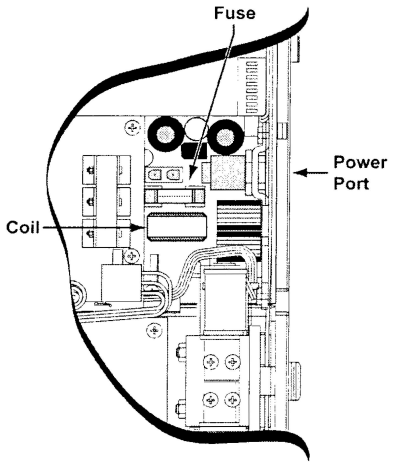

Power PCBA P/N 10134

[67] The Fuse Removal / Installation tool is available separately, or as part of the Maintenance Calibration Kit. P/N 11566.

- For ventilators with earlier version Power PCBA P/N 11511, insert the removal end of the Fuse Removal / Installation tool between the Internal Battery connector and the glass portion of the fuse (slight force may be required). Pull the fuse up and out of the fuse clips (the 4-wire Pigtail Cable connector may be disconnected and moved aside if desired/required).

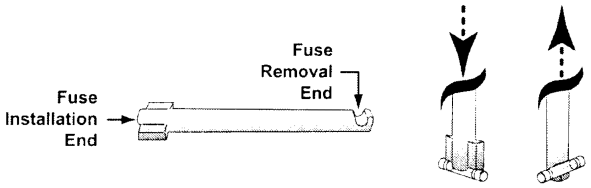

Fuse Removal / Installation Tool

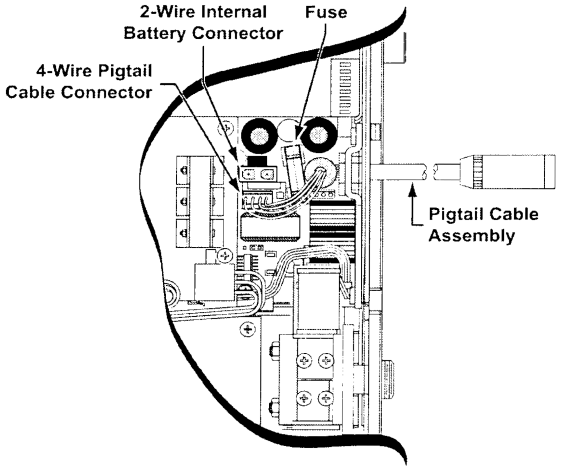

Power PCBA P/N 11511

3) Place the new fuse on top of the fuse clips (centered between the clips). Set the installation end of the Fuse Removal / Installation tool on the fuse (centered) and press down inserting the fuse into the clips on the Power Board.
   - When properly seated, the fuse will "snap" into position in the clips.
   - Use of excessive force may cause the clips to spread apart and the fuse to be improperly seated.
4) For ventilators with earlier version Power PCBA P/N 11511, reconnect the 4-wire Pigtail Cable connector, if previously disconnected.
5) Reconnect the 2-wire Internal Battery connector and replace the Back Panel (see *instructions* on page 8-27).

Right and Left Soft Side Panels

Parts Required for Replacement:	Tools Required:
Replace if damaged: • Left Soft Side P/N 10105 • Right Soft Side P/N 10106 • 3/8" Flat-head Screw (3 each side) P/N 10474 • 1/4" Flat-head Screw (7 each side) P/N 10430 • Finish Washer (10 each side) P/N 10191 • Handle Attachment (1 each side) P/N 10118	• Phillips / cross tip screwdriver with torque meter • Grounded anti-static wrist strap

To replace the right or left soft side panel:

1) Remove the 10 flat-head screws and gray finish washers from the right or left side of the ventilator as shown.
2) Pull off the Soft Side Panel and set aside the handle attachment.
3) Position the new Soft Side Panel and the handle attachment. Replace the 3 3/8" flat-head screws and finish washers in the 3 center holes on the bottom side of the ventilator. Replace the 7 1/4" flat-head screws and gray finish washers in the remaining holes. Screws should be torqued to **20 in-oz** (0.14 Nm).

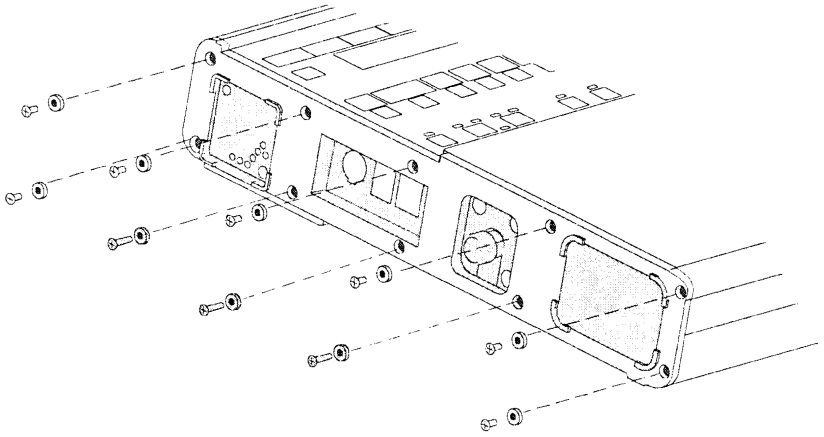

Rotary Knob Assembly

Parts Required for Replacement:	Tools Required:

• Rotary Switch Replacement Kit P/N 14271
  • Rotary Switch (with hex nut) P/N 11190[68]
  • Washer P/N 11644[68]
  • O-Ring P/N 11645[68]
  • Knob Spring P/N 10443[68]
  • Knob P/N 10111[68]
	• Phillips / cross tip screwdriver with torqu meter
	• 2 small flat tip screwdrivers or dental pic
	• 1/2" nut driver adapter for torque wrench
	• 13mm nut driver adapter for torque wrer
	• Grounded anti-static wrist strap

To remove and replace the Rotary Knob assembly:

1) With the ventilator face up, gently pry the knob off the rotary switch shaft using dental picks or small flat-edged screwdrivers. There are 2 notches in the underside of the knob to make this easier. Use caution: Do not damage the edge of the faceplate around the knob.
2) Remove the ventilator Back Panel and disconnect the Internal Battery cable from the Power Board (see *instructions* on page 8-23).
3) Disconnect the rotary switch cable connector from the Power Board.
4) Use a 1/2" nut driver for earlier version assemblies or a 13mm nut driver for current version assemblies, and remove and discard the retaining nut from the front of the ventilator.
5) Carefully remove (discard) the rotary switch assembly and rubber gasket (earlier version assembles) or washer and O-ring (current version assemblies) from the back of the ventilator through the openings in the power and Main Boards.

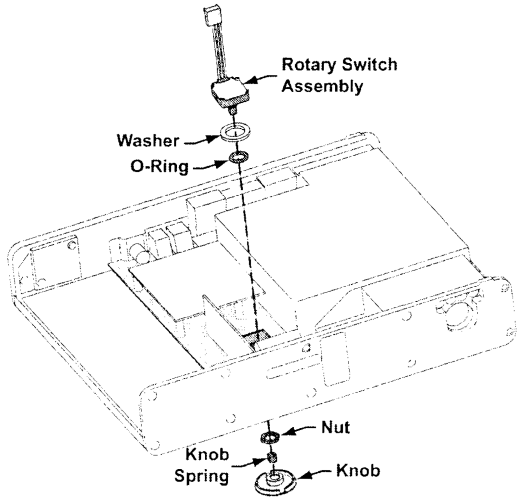

[68] Contained in Rotary Switch Replacement Kit P/N 14271

6) Place the O-Ring (P/N 11645) inside the Washer (P/N 11644), insert them through the openings in the power and Main Boards and center both over the Rotary Knob shaft cutout in the Upper Weldment.

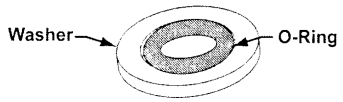

7) Insert the new Rotary Switch Assembly (P/N 11190) through the openings in the power and Main Boards so the shaft extends through the O-ring, washer and cutout in the Upper Weldment.
   - The switch assembly should be oriented so the wire leads are towards the same side of the ventilator as the Oxygen Blender.
8) Hold the switch in-place and tread the hex nut onto the rotary switch shaft. Use a 13mm nut driver and torque-tighten the nut to **40 in-oz** (0.28 Nm).
9) Connect the switch assembly 3-wire connector to the Power Board.
   - The connector is keyed to fit in only one direction and will snap into place when properly connected.
10) Reconnect the Internal Battery and replace the Back Panel (see *instructions* on page 8-27).
11) If you are replacing the knob, check the new knob to be sure the knob spring is installed in the back of the knob. If not, press the knob spring into the center of the hole on the back of the knob.
12) Press the knob onto the rotary switch shaft, lining up the flat area of the knob spring with the flat area of the shaft. When completely in place, the knob should be flush with the faceplate of the ventilator.

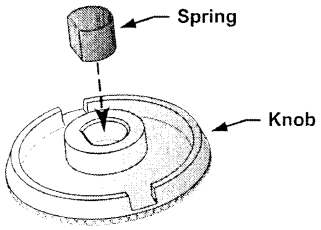

13) To verify the new rotary switch is operating correctly, turn the ventilator on, select a control then increase and decrease the control setting. The control should operate normally.

Solenoid Manifold Assembly

Parts Required for Replacement:	Tools Required:
• Solenoid Manifold Assembly P/N 10710[69] or, • Solenoid Manifold Assembly P/N 14125[70] **Replace if required:** • Kapton Tape P/N 11321 **If Not Previously Installed:** • 7/8" Red colored Pan-head Screw, P/N 10607R • 5/8" Yellow colored Pan-head Screw, P/N 10437Y • 1/4" 4-40 Hex-Nut, P/N 10342 • LTV® Tubing Enhancement Kit (1) P/N 11684	• Phillips / cross tip screwdriver with torque meter • 1/4" Nut Driver adapter for torque wrench • Grounded anti-static wrist strap

To replace the Solenoid Manifold:

1) Remove the Back Panel of the ventilator and disconnect the Internal Battery cable (see *instructions* on page 8-23).
2) Disconnect the flexible tubes from the connectors on the Solenoid Manifold (see *configuration diagrams* page 8-31 through 8-34).

> ***Note***
> Prior to disconnecting or removing any of the tubes, the Internal Flexible Tube Routing Configurations table and diagrams (*see pages 8-31 through 8-34*) must be reviewed to establish and note the tube routing configuration that exists in the particular ventilator being serviced. Once established, the applicable diagram may then be referred to when reconnecting the tubes.

3) Disconnect the two 2-wire connectors from the Purge Solenoids and remove the two mounting screws from the Solenoid Manifold (used with earlier version Power Boards) ***or*** one mounting screw and one hex-nut (used with current version Power Boards).
   - Earlier version LTV® 800 ventilators do not have the 2-wire connectors on the Power PCBA or a Purge Solenoid on the Solenoid Manifold assembly.

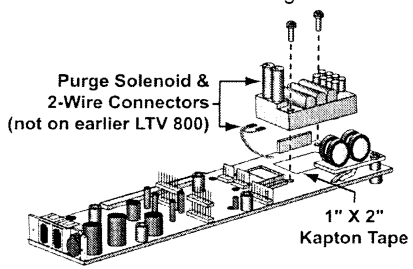

Earlier Version Power Boards (P/N 10134 or P/N 11511)

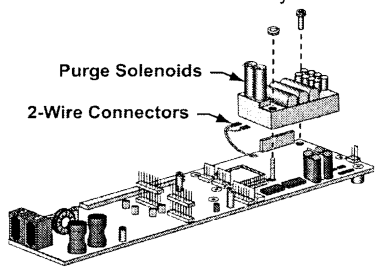

Current Version Power Board (P/N 15000)

[69] Solenoid Manifold Assembly P/N 10710 is for use on LTV® 1000, 950 and 900

[70] Solenoid Manifold Assembly P/N 14125 is for use on LTV® 800 ventilators in combination with Power PCBA P/N 11511 and software version 3.12 or higher ***or*** Power PCBA P/N 15000 and software version 3.13 or higher.

4) Remove the Solenoid Manifold from the Power Board.

5) For LTV® 1000, 950 and 900 ventilators with an earlier version Power PCBA (P/N 11511), inspect the Power PCBA to see if Kapton tape is applied within the footprint where the Solenoid Manifold mounts. If no Kapton Tape is present, apply a 1" x 2" strip of Kapton tape to the Power PCBA, centered within the footprint of the Solenoid Manifold. The Kapton Tape should fit between the screw holes that secure the Solenoid Manifold.
   - Current version Power PCBA (P/N 15000) does not require the application of Kapton tape.

> ***WARNING !***
>
> **Mounting Screw Use** – Use care to assure the correct length mounting screws are used as specified in the instructions or internal damage to the ventilator may result.

6) When installing the Solenoid Manifold[71] on an earlier version Power PCBA (P/N 11511), align the Solenoid Manifold leads with the **JP17** connector on the Power Board and press into place.

   When installing the Solenoid Manifold[71] on a current version Power PCBA (P/N 15000), slide the Solenoid Manifold over the threaded mounting stud on the Power Board, align the solenoid leads with the **JP17** connector on the Power Board and press the Solenoid Manifold into place.
   - Care should be taken to ensure the wire leads are in the proper connector locations.

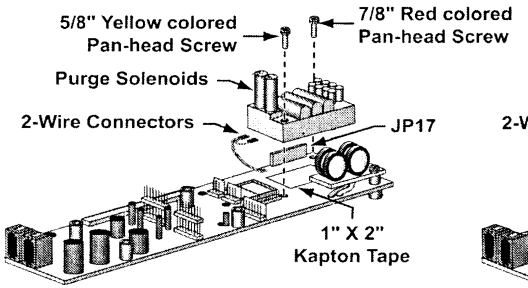

Earlier Version Power Board (P/N 11511)

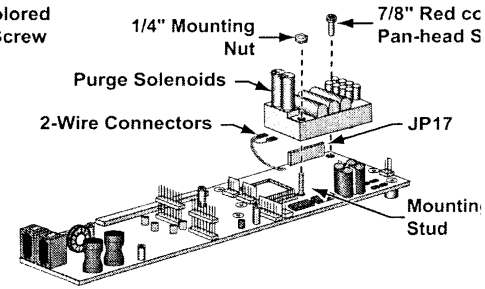

Current Version Power Board (P/N 15000)

[71] LTV® 1000, 950 and 900 use Solenoid Manifold Assembly P/N 10710. LTV® 800 ventilators use Solenoid Manifold Assembly P/N 14125 in combination with Power PCBA P/N 11511 and software version 3.12 or higher ***or*** Power PCBA P/N 15000 and software version 3.13 or higher.

7) When installing the Solenoid Manifold on an earlier version Power PCBA (P/N 11511), replace the two Solenoid Manifold mounting screws as shown and torque tighten to **20 in-oz** (0.14 Nm).

   When installing the Solenoid Manifold on a current version Power PCBA (P/N 15000), thread one 1/4" Solenoid Manifold Mounting Nut (P/N 10342) onto the Power Board mounting stud protruding through the Solenoid Manifold and replace the Solenoid Manifold mounting screw, as shown. Torque tighten both to **20 in-oz** (0.14 Nm).

   - If not previously installed, replace existing screws with colored screws as shown below;
     - 7/8" Red colored Pan-head Screw, P/N 10607R
     - 5/8" Yellow colored Pan-head Screw, P/N 10437Y

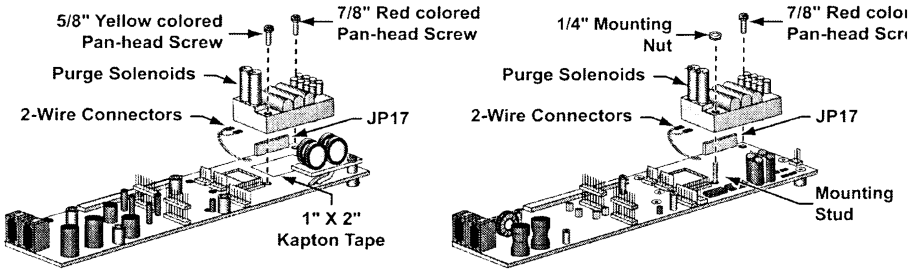

Earlier Version Power Board (P/N 11511)

Current Version Power Board (P/N 15000)

8) Reconnect the two 2-wire connectors to the Solenoid leads.
   - Orientation does not matter and only one connector is used on the LTV® 800.

9) Reconnect the flexible tubes to the Solenoid Manifold following the internal flexible tube routing configuration/diagram previously noted (see *pages 8-31 through 8-34*). Inspect all flexible tubes for tears at the connecting ends and replace worn or damaged tubes if necessary.

10) Reconnect the Internal Battery and replace the Back Panel (see *instructions* on page 8-27).

Thermo Conductive Motor Board Heatsink Pad

Thermo Conductive Pads should be replaced any time they have hardened, and at 30,000 hours. The Motor Board heat sink pad is located on the inside of the Back Panel.

Parts Required for Replacement:	Tools Required:
• Thermo Conductive Motor Board Heatsink Pad P/N 11441	• Phillips / cross tip screwdriver with torque meter • Grounded anti-static wrist strap • Mild cleanser

To replace the Thermo Conductive Pad on the inside of the Back Panel:

1) Remove the Back Panel of the ventilator and disconnect the Internal Battery cable (see *instructions* on page 8-23).
2) Peel the Thermo Conductive Pad off the inside of the Back Panel.
3) If there is any adhesive residue left on the inside of the Back Panel, remove it by washing with a mild cleanser.
4) Remove the protective backing from the new Thermo Conductive Pad and place it on the inside surface of the Back Panel as shown.

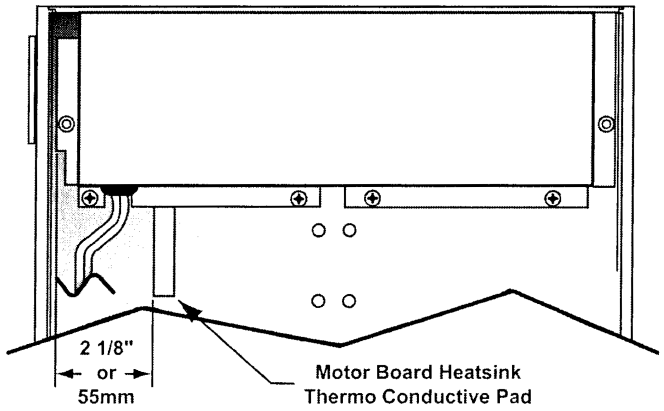

5) Remove the protective cover from the Thermo Conductive Pad.
6) Reconnect the Internal Battery and replace the Back Panel (see *instructions* on page 8-27).

Thermo Conductive Turbine Pad

Thermo Conductive Pads should be replaced any time they have hardened, and at 30,000 hours. The turbine heat sink pad is located between the inside of the Upper Weldment and the turbine.

Parts Required for Replacement:	Tools Required:
• Thermo Conductive Turbine Pad P/N 10129	• Phillips / cross tip screwdriver with torque meter • Grounded anti-static wrist strap • Mild cleanser

To replace the Thermo Conductive Turbine Pad, see *instructions* on removing and replacing the Turbine Manifold on page 8-95.

Turbine Manifold

Parts Required for Replacement:	Tools Required:
• Turbine Manifold Assembly P/N 11490 • Cable Tie P/N 10466 • O_2 Donut Seal P/N 10603 • Silicone Gel Lubricant P/N 10123[72] **Replace if damaged:** • Thermo Conductive Pad P/N 10129 • Sealing Gasket P/N 10175 • Damping Grommets (4) P/N 10266 • Grounding Clips (4) P/N 10752 **If Not Previously Installed:** • 1 7/8" Black colored Pan-head Screws (4), P/N 10918B • LTV® Tubing Enhancement Kit (1) P/N 11684	• Phillips / cross tip screwdriver with tor meter • Grounded anti-static wrist strap • Small dykes or cutte • Mild cleanser • Cable tie tool • Flow Valve Insertior Tool (Mylar) P/N 14:

When replacing the Turbine Manifold, it is easiest to remove several components and replace them together. These will be done in the following order:

- Remove the Back Panel and disconnect the battery.
- Remove the left soft side.
- Remove the Motor Board.
- Remove the Flow Valve.
- Remove the Turbine Manifold and Oxygen Blender as a unit.
- Disconnect the Oxygen Blender from the Turbine Manifold.
- Connect the Oxygen Blender to the new Turbine Manifold.
- Replace the Oxygen Blender and Turbine Manifold as a unit.
- Replace the Flow Valve.
- Replace the left soft side.
- Reconnect the battery and replace the Back Panel.

1) Remove the Back Panel and disconnect the battery (see *instructions* on page 8-23).
2) Remove the left soft side (see *instructions* on page 8-87).
3) Remove the Motor Board (see *instructions* on page 8-65).
4) Remove the Flow Valve (see *instructions* on page 8-45).

To remove the Turbine Manifold and Oxygen Blender:

1) Disconnect the O_2 Blender's 8-wire connector from the Power Board (Blender only).
2) Disconnect the O_2 tube from the oxygen pressure transducer on the Analog Board (Blender only).
3) Disconnect the turbine's 3-wire and 5-wire connectors from the Motor Board.

[72] In the European Union, Loctite® 8104 may be substituted as an equivalent compound.

4) Disconnect the bypass tubing from the connector at the base of the Turbine Manifold.

5) Remove the 4 screws labeled **MANIFOLD SCREW** from the Turbine Manifold.

6) Remove the 4 Blender mounting screws and metal washers from the outside of the ventilator.

7) Remove the Oxygen Blender, Turbine Manifold and Interior Inlet Filter. Use caution do not remove the grounding straps and grommets that are between the Oxygen Blender and the side of the ventilator case.

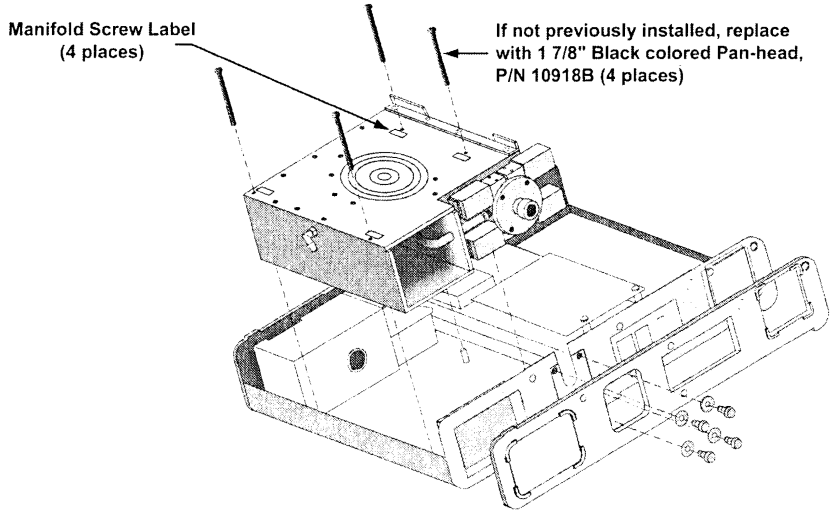

8) The Thermo Conductive Pad beneath the turbine may adhere to the turbine when it is removed, or may remain attached to the case. If the Thermo Conductive Pad remains attached to the case, check it for damage or hardening and replace it if necessary. If the Thermo Conductive Pad comes out with the turbine, replace it with a new pad.

To replace the Thermo Conductive Pad:

1) Peel the Thermo Conductive Pad off.

2) If there is any adhesive residue left on the inside of the Upper Weldment or the turbine assembly, remove it by washing with a mild cleaner.

3) Remove the protective backing from the smooth side of the new Thermo Conductive Pad and place it on the turbine surface.

4) Remove the protective cover from the Thermo Conductive Pad.

To connect the new Turbine Manifold to the Oxygen Blender:

1) Handle the manifold and Blender carefully so as not to break the silicone seal around the oxygen tube entering the manifold. If this seal is damaged, repair with RTV silicone.
2) Cut the cable tie that is holding the tube connection to the Oxygen Blender or oxygen bleed-in block. Separate the Oxygen Blender and Turbine Manifold.
3) Make a loose loop with a cable tie and slide it over the tube that connects the Turbine Manifold to the Oxygen Blender. Connect the tube to the barbed fitting on the Oxygen Blender.

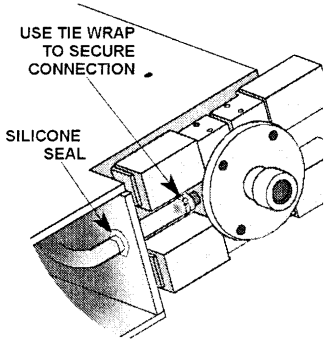

4) Using a cable tie tool, tighten the cable tie to 1 tension. The cable tie tool should trim the tail off close to the connector.

To install the new Turbine Manifold and Oxygen Blender:

1) Slide the new Turbine Manifold and Oxygen Blender into place. Be sure not to catch any tubing or wiring under the manifold while it is being installed.

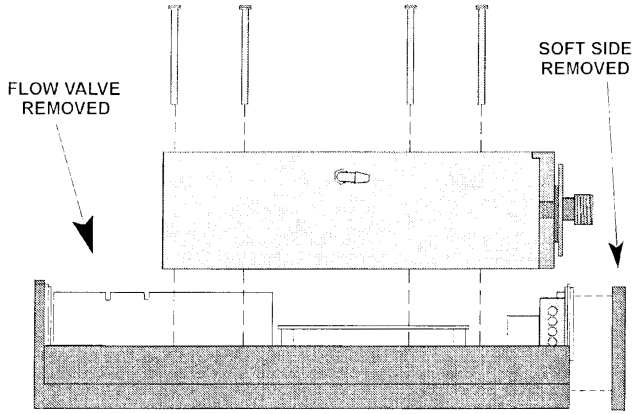

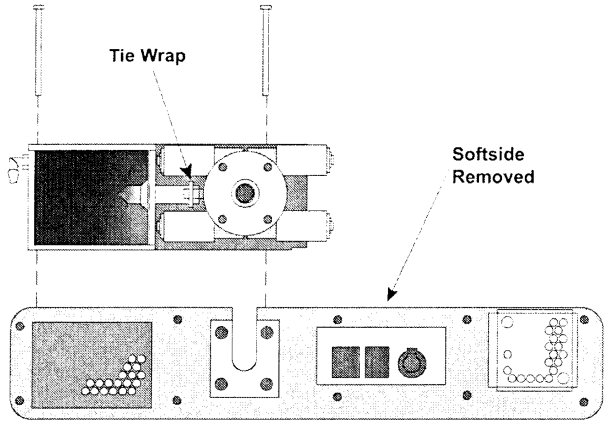

2) Replace the 4 screws into the Turbine Manifold. Screws should be torqued to **20 in-oz** (0.14 Nm).
   - If not previously installed, replace with 1 7/8" Black colored pan-head screws (4), P/N 10918B.

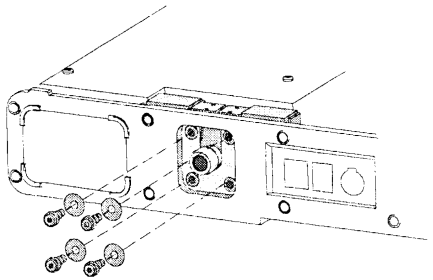

3) Check the rubber grommets and grounding clips on the Oxygen Blender mounting for wear and replace if necessary. Replace the 4 Blender mounting screws and metal washers. Use a straight edged screwdriver or pick to prevent each of the clips from turning as of the screws are tightened. Screws should be torqued to **60 in-oz** (0.42 Nm). The clips should be positioned so the folded edge is oriented up and parallel with the back of the ventilator. If the upper clips are not aligned with the edge of the side panel, the Back Panel of the ventilator will not seat correctly.

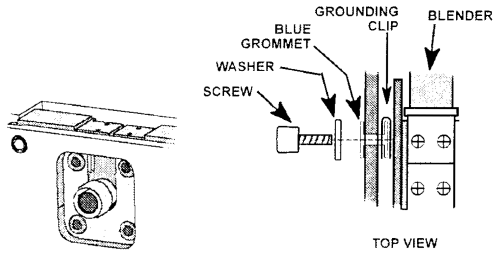

4) (Blender only) Lay the wire / tubing bundle from the Blender along the side of the Turbine Manifold on top of the Power Board between the Motor Board connector standoffs and the side of the manifold. Press the O_2 tube from the Blender into the barrel connector to the oxygen transducer located on the Analog Board. The tube should seat in approximately 1/2" and should not be easily removable. If the tube is not inserted completely, it will disconnect when a high pressure oxygen source is connected.

5) Connect the 8-wire connector from the Oxygen Blender to the Power Board.
   - The connector is keyed to fit in only one direction and will snap into place when properly connected.

6) Tuck the wrapped wires and oxygen tube down along the side of the Turbine Manifold against the Power Board.

7) Replace the Motor Board (see *instructions* on page 8-65).

8) Connect the 3-wire and 5-wire connectors from the turbine to the Motor Board.
   - The connectors are keyed to fit in only one direction and will snap into place when properly connected.

9) Inspect the orange seal on the side of the Flow Valve. If it is damaged, remove and replace it with a new seal as follows: Peel the old seal off the exhalation valve. Remove any old adhesive from the Flow Valve using a mild detergent and dry the valve side. Remove the protective backing from the Flow Valve seal and press it into place.

10) Replace the Flow Valve (see *instructions* on page 8-45).

11) Connect the bypass tubing from the Flow Valve to the barbed elbow at the bottom of the Turbine Manifold. The tubing should be looped into the space between the bottom of the manifold and the bottom edge of the Upper Weldment so that it is out of the way and will not be pinched when the back of the ventilator is replaced.

12) Replace the internal inlet filter (see *instructions* on page 8-58).

13) Replace the left soft side (see *instructions* on page 8-87).

14) **Reconnect the Internal Battery and replace the Back Panel** (see *instructions* on page 8-27).

Chapter 9 - FINAL CHECKOUT TEST

This section provides a set of checkout tests that should be performed after modifications have been made to the ventilator. Checkout worksheets are provided afte the test instructions for recording the results of each checkout test.

Checkout Test Selection

The following matrix shows what tests should be performed based on what parts have been replaced. Note that Calibration and Power Checkout must be done while the Back Panel is off the ventilator. No checkout tests are required when changing the External Inlet Filter, the O_2 Inlet Filter, and the Fan Filter.

Part Replaced	Calibration Required	Power Checkout	General Checkout	Performance Checkout	Oxygen Checkout	24 Hou Burn-in
Alarm Sounder			X			
Analog Board Assembly	X	X	X	X	X	X
Fan Assembly			X			X
Flow Valve Assembly	X		X	X	X	X
Front Panel	X		X			X
Interior Inlet Filter			X			
Internal Battery Pack		X	X			
Internal Flexible Tubing	X		X	X	X	
Main Board Assembly	X	X	X	X	X	X
Memory Board Assembly	X		X	X	X	X
Motor Board Assembly	X		X	X	X	X
O_2 Blender Assembly	X		X	X	X	X
Power Board Assembly	X	X	X	X	X	X
Power Board Fuse		X	X			
Rotary Knob Assembly			X			
Soft Side Panel			X			
Solenoid Manifold	X		X	X	X	X
Thermo Conductive Pad			X			
Turbine Manifold			X	X	X	X
Ventilator Back Panel			X			

General Checkout

Tools Required:

- Manometer 0-100 cmH_2O
- O_2 Analyzer, calibrated
- Spirometer, calibrated
- Compressed O_2 source with a 0-60 PSI regulator
- Compressed gas source with a 0-50 cmH_2O regulator (syringe and manometer may be used)
- 1 liter or greater test lung
- Digital Multi-Meter
- Patient Assist Cable, Normally Closed, P/N 10779[73]
- Patient Assist Cable, Normally Open, P/N 10780[73]

1) Connect the AC adapter to a valid AC power source. Connect the patient circuit to the ventilator and to a test lung with a compliance of 10 ml/cmH_2O and a resistance of 5 cm/L/sec. Do not connect the Oxygen supply.

2) Run the Ventilator Checkout **VENT CHECK** Tests.

Test	Result
A) Alarm	• Audible alarm must activate for minimum 2 seconds. • Confirming audible Chirp[74] must activate after alarm is silenced.
B) Display	All displays must illuminate (except Vent Inop).
C) Control	As each button is pressed, the correct label must be displayed in the monitor windows. This includes rotating the knob left and right. Leave the Select button until last.
D) Leak	Ventilator and circuit must pass the leak test (remove the test lung and occlude patient wye).
E) Vent Inop Alarm	• Audible alarm must sound and Vent Inop LED must illuminate continuously for 15 seconds. • Confirming audible Chirp[74] must activate after alarm is silenced.

3) Power the ventilator up and observe the POST tests. All POST tests must complete normally.

A) Audible alarm is on for 1 second.
B) Confirming audible Chirp[74] occurs after alarm.
C) All displays (except Vent Inop) are lit for 3 seconds.

[73] The Patient Assist Cables are available separately, or as part of the Maintenance Calibration Kit, P/N 11566.

[74] Only applicable on ventilators with Power Board P/N 15000 installed (as indicated by an audio sound symbol (•)) on the back panel label).

D) The POST messages are flashed in the message window.
- **CPU**
- **SRAM**
- **INT VECTOR**
- **ROM CRC**
- **EEPROM**

E) When the POST tests are successfully passed, ventilation begins within 20 seconds.

4) Disconnect the ventilator from all external power sources. Power the ventilator up and observe the POST tests. All POST tests must complete normally.

A) Audible alarm is on for 1 second.

B) Confirming audible Chirp[75] occurs after alarm.

C) All displays (except External Power, Charge Status, and Vent Inop) are lit for 3 seconds.

D) The POST messages are briefly flashed in the message window.
- **CPU**
- **SRAM**
- **INT VECTOR**
- **ROM CRC**
- **EEPROM**

E) When the POST tests are successfully passed, ventilation begins within 20 seconds.

5) Reconnect the AC adapter and perform the following tests:

Ventilator Settings and Procedure	Performance Requirement
A) Set the vent to the following settings and operate for at least two minutes: **Mode:** Volume, Assist/Ctrl **Low Press O_2:** Off [76] **Breath Rate:** 12 **Tidal Volume:** 500 **Insp. Time:** 1.0 sec **Pressure Support:** 0[77] **O_2%:** 21[76] **Sensitivity:** 3 **High Pressure Limit:** 100 **Low Pressure Alarm:** 5 **Low Min Vol:** 1.0 **PEEP:** Minimum	Selected Monitors should read as follows: • Exhaled Tidal Volume: 383 to 633 ml[78] • I:E Ratio : 1:3.8 to 1:4.2 • Total Breath Rate: 12 bpm • Total Minute Vol: 4.6 to 7.6 L[78] • No Alarms activate

B) Set the O_2% control to 22%[76]	**LOW O2 PRES** alarm activates
C) Reset O_2% to 21% and clear the alarm. Set the Low Min Vol Alarm to 10 L.	**LOW MIN VOL** alarm activates
D) Reset the Low Min Vol Alarm to 1.0 and clear the alarm. Set the Low Pressure alarm to 60.	**LOW PRES** alarm activates
E) Set the Low Pressure Alarm to 5 and clear the alarm. Set the High Pres Limit to 10 cmH_2O below the Peak Inspiratory Pressure.	**HIGH PRES** alarm activates.
F) Reset the High Pressure Limit alarm to 100 and clear the alarm.	
G) Connect 40 to 70 PSIG oxygen to the unit and set the O_2% control to 60. Connect an external oxygen monitor to the patient circuit. [79]	• External oxygen monitor should read 55 to 65% O_2. • No alarms activate.
H) Reset O_2% control to 21.[79]	
I) Disconnect the high pressure sense line from the ventilator.	**DISC/SENSE** alarm activates on the next breath.
J) Reconnect the pressure sense lines and clear the alarm.	
K) Change control settings as follows: [80] **Mode:** Pressure, Assist/Control **Pressure Control:** 40 **PEEP:** Max	Selected Monitors should read as follows: • PIP: 36 to 44 cmH_2O • PEEP: 17 to 23 cmH_2O • No alarms activate.
L) Disconnect AC Adapter from Ventilator.	• **POWER LOST** alarm activates. • Battery Level LED illuminates showing the charge level. • Ventilator continues to operate from the Internal Battery.

[75] Only applicable on ventilators with Power Board P/N 15000 installed (as indicated by an audio sound symbol (♪) on the back panel label).
[76] Oxygen source and tested O_2% only apply to the LTV® 1000 model.
[77] Not applicable to the LTV® 800 or 900.
[78] Not applicable to the LTV® 800.
[79] Oxygen source and tested O_2% only apply to the LTV® 1000 model.
[80] Pressure Mode and Pressure Control setting only apply to the LTV® 1000 and LTV® 950 models.

M) Clear the **POWER LOST** alarm. Turn the ventilator off. Wait 15 seconds.	• After the ventilator is turned off, the **INOP** alarm sounds continuously for a duration of 15 seconds. • **Vent Inop** LED illuminates continuously for a duration of 15 seconds.
N) Clear the **INOP** alarm. Test is complete.	Confirming audible Chirp[81] must activate after alarm is silenced.

6) Perform a Patient Assist Port response test.

A) Connect a Patient Assist Cable, Normally Closed (P/N 10779) to the ventilator Patient Assist port, reconnect the AC adapter, power the ventilator up and clear all alarms.	
B) Use a Digital Multi-Meter to measure the resistance at the ¼" plug of the Patient Assist Cable.	Resistance ≤2.3 ohm[82]
C) Create a High Pressure alarm by changing the High Pressure Limit setting to 5 and measure the plug resistance.	Resistance >1.0 mega ohms
D) Return the High Pressure Limit setting to 100 and clear all alarms.	
E) Turn the ventilator off, leaving the audible alarm sounding and measure the plug resistance.	Resistance >1.0 mega ohms
F) Press the Silence/Reset button to clear the audible alarm and measure the plug resistance.	Resistance ≤2.3 ohm[82]
G) Disconnect the Patient Assist Cable, Normally Closed (P/N 10779) and connect a Patient Assist Cable, Normally Open (P/N 10780) to the ventilator Patient Assist port.	

[81] Only applicable on ventilators with Power Board P/N 15000 installed (as indicated by an audio sound symbol (•) on the back panel label).

[82] This measurement can best be obtained using the relative (delta) measurement of a DMM.

H) Turn the ventilator back on in breathing mode, clear all alarms and measure the plug resistance.	Resistance >1.0 mega ohms
I) Create a High Pressure alarm by changing the High Pressure Limit setting to 5 and measure the plug resistance.	Resistance ≤2.3 ohm[83]
J) Return the High Pressure Limit setting to 100 and clear all alarms.	
K) Turn the ventilator off, leaving the audible alarm sounding and measure the plug resistance.	Resistance ≤2.3 ohm[83]
L) Press the Silence/Reset button to clear the audible alarm and measure the plug resistance.	Resistance >1.0 mega ohms.

7) Check date, time and usage by operating the ventilator using the test lung for 1 hour.

A) Set the date to the current date.	Note the current date and date format.
B) Set the time to the current time.	Note the current time.
C) Note the current usage meter.	
D) Run the ventilator connected to a test lung for 1 hour.	Verify that no alarms occur.
E) Power the vent off and on. Check the date.	Date has incremented correctly.
F) Check the time.	Time is correct.
G) Note the current usage meter.	Usage Meter has incremented correctly.

[83] This measurement can best be obtained using the relative (delta) measurement of a DMM.

General Checkout Worksheet

SERIAL NUMBER: _____ CONDUCTED BY: _____

MEMORY BOARD SOFTWARE VER.: _____ DATE: _____

TEST DESCRIPTION	STEP #	MEAS. VALUE	REQUIREMENT	P /
Ventilator Checkout ("VENT CHECK")				
Alarm	2)A)		Audible alarm tone must activate	
			Confirming audible Chirp[84] must activate after alarm is silenced.	
Display	2)B)		All displays must light except VENT INOP	
Control	2)C)		Correct messages displayed in window	
Leak	2)D)		Record value displayed ("X.X PASS/FAIL")	
Vent Inop Alarm	2)E)		Audible alarm must sound continuously for 15 seconds and Vent Inop LED must illuminate continuously for 15 seconds	
			Confirming audible Chirp[84] must activate after alarm is silenced.	
Power On Self-Test - External Power				
Audible Alarm	3)A)		Verify audible alarm sounds for 1 sec	
	3)B)		Confirming audible Chirp[84] occurs after alarm	
Display Illumination	3)C)		Illuminate for 3 seconds	
Test Messages:	3)D)		Each message displayed for less than 3 sec	
Begin Normal Operation	3)E)		Within 20 seconds of power ON	
Power On Self-Test - Battery Power				
Audible Alarm	4)A)		Verify audible alarm sounds for 1 sec	
	4)B)		Confirming audible Chirp[84] occurs after alarm	
Display Illumination	4)C)		Illuminate for 3 seconds	
Test Messages:	4)D)		Each message displayed for less than 3 sec	
Begin Normal Operation	4)E)		Within 20 seconds of power ON	

[84] Only applicable on ventilators with Power Board P/N 15000 installed (as indicated by an audio sound symbol (♪) on the back panel label).

TEST DESCRIPTION	STEP #	MEAS. VALUE	REQUIREMENT	P /
Volume Operation				
Settings: Volume Mode / Assist/Ctrl Low Pres O_2 = Off [85] BPM = 12 Tidal Volume = 500 Inspiratory Time = 1.0 Pressure Support = 0[86] O_2 % = 21[85] Sensitivity = 3 High Pressure Limit = 100 Low Pressure Alarm = 5 Low Minute Volume = 1.0 PEEP = minimum	5)A)		Monitors should read as follows: Vte: 383 to 633 ml[87]	
			I:E Ratio: 1:3.8 to 1:4.2	
			f: 12 bpm	
			VE: 4.6 to 7.6 L[87]	
			No alarms are occurring	
Alarm Settings				
Low O_2 Pres Alarm[85]	5)B)			
Set O_2% to 22%			Alarm must activate immediately	
Low Minute Volume Alarm	5)C)			
LMV alarm set to 10			Alarm must activate at start of next breath	
Low Pressure Alarm	5)D)			
LP alarm set to 60 cmH_2O			Alarm must activate at end of the next inspiration	
High Pressure Alarm	5)E)			
HP alarm 10 cmH_2O below monitored PIP			Alarm must activate on the next breath	
O_2 Enrichment[85]				
O_2 Inlet pressure @ 40 to 70 psig, %O_2 @ 60%	5)G)		External O_2 monitor = 55% to 65%.	
			No alarms activate.	
Disc / Sense Alarm				
High side sense line disconnected from unit	5)I)		Alarm must activate at start of next inspiration	
Pressure Operation[88]				
Control Settings: Pressure Assist / Control Pressure Control = 40 PEEP = Maximum	5)K)		Monitors should read as follows: PIP: 36 to 44 cmH_2O	
			PEEP: 17 to 23 cmH_2O	
			No alarms activate.	

[85] Applicable on LTV® 1000 only
[86] Not applicable on the LTV® 800 or 900
[87] Not applicable to the LTV® 800
[88] Pressure Mode and Pressure Control settings only apply to the LTV® 1000 and the LTV® 950 models

TEST DESCRIPTION	STEP #	MEAS. VALUE	REQUIREMENT	P /
Power Alarm				
Disconnect AC adapter from ventilator	5)L)		POWER LOST alarm activates.	
			Battery Level LED illuminates showing the charge level.	
			Ventilator continues to operate from Internal Battery	
INOP Alarm				
Clear the POWER LOST alarm. Turn the ventilator off. Wait 15 seconds.	5)M)		After the ventilator is turned off, the INOP alarm sounds continuously for a duration of 15 seconds.	
			Vent Inop LED illuminates continuously for a duration of 15 seconds.	
Clear the Inop alarm. Test is complete.	5)N)		Confirming audible Chirp[89] must activate after alarm is silenced	
Patient Assist Port				
Connect Patient Assist Cable, Normally Closed (P/N 10779), reconnect AC adapter, power ventilator up and clear all alarms.	6)A)			
Measure plug resistance.	6)B)		Resistance ≤2.3 ohm	
Change High Pressure Limit setting to 5 (create alarm) and measure plug resistance.	6)C)		Resistance >1.0 mega ohms	
Return High Pressure Limit setting to 100 and clear all alarms.	6)D)			
Turn ventilator off, leaving alarm sounding and measure plug resistance.	6)E)		Resistance >1.0 mega ohms	
Press Silence/Reset to clear alarm and measure plug resistance.	6)F)		Resistance ≤2.3 ohm	
Disconnect Patient Assist Cable, Normally Closed (P/N 10779) and connect Patient Assist Cable, Normally Open (P/N 10780).	6)G)			
Power ventilator up, clear alarms and measure plug resistance.	6)H)		Resistance >1.0 mega ohms	
Change High Pressure Limit setting to 5 (create alarm) and measure plug resistance.	6)I)		Resistance ≤2.3 ohm	
Return High Pressure Limit setting to 100 and clear all alarms.	6)J)			
Turn ventilator off, leaving alarm sounding and measure plug resistance.	6)K)		Resistance ≤2.3 ohm	
Press Silence/Reset button to clear alarm and measure plug resistance.	6)L)		Resistance >1.0 mega ohms.	

[89] Only applicable on ventilators with Power Board P/N 15000 installed (as indicated by an audio sound symbol (♪) on the back panel label).

TEST DESCRIPTION	STEP #	MEAS. VALUE	REQUIREMENT	P /
Burn In				
Set Current Date	7)A)		Current Date: Date Format:	
Set Current Time	7)B)		Current Time:	
Note Usage Meter	7)C)		Note usage meter	
Operate ventilator on test lung for 1 Hr	7)D)		No alarms occur.	
Power vent off and on, Check Current Date	7)E)		Date is correct.	
Check Current Time	7)F)		Time is correct.	
Verify Usage Meter	7)G)		Usage meter has incremented correctly.	

Power Checkout

Tools Required:
• Internal Battery Test Cable[90], P/N 11472 • External Battery Test Cable[90], P/N 11474 • Variable DC voltage source

1) Perform a battery level test. Remove external power and replace the Internal Battery with a variable DC voltage source, using the Internal Battery test cable.

Ventilator Settings and Procedure	Performance Requirement
A) Replace battery with DC voltage source between 14.8V and 15.0V.	• Normal operation. • Battery LED is green. • No alarms activate.
B) Slowly reduce voltage until battery LED changes to amber.	• Normal operation. • DC voltage source is 11.9V ± 2% • **BAT LOW** Alarm • Audible alarm sounds.
C) Slowly reduce voltage until battery LED changes to red.	• Normal operation. • DC voltage source is 11.5V ± 2% • **BAT EMPTY** Alarm. • Audible alarm sounds.

D) Slowly reduce voltage until battery LED extinguishes.	• DC voltage source for ventilators with;
	  • Power board P/N 10134 - 9.4V to 10.4V
	  • Power board P/N 11511 - 9.4V to 10.4V
	  • Power board P/N 15000 - 10.0V ± 2%
	• **Vent Inop** LED illuminated.
	• Audible alarm sounds.

E) Remove DC voltage source and test cable. Reconnect the Internal Battery.	

2) Perform a battery duration/battery charge test[91].

A) Remove external power and operate unit from battery until it shuts down. Connect external power and allow the unit to operate normally and charge the battery for 8 hours.	

[90] The Internal Battery Test Cable and the External Battery Test Cable are available separately or as part of the Maintenance Calibration Kit, P/N 11566.

[91] When LTV® software version 3.13 or greater is installed, it is normal for a **RESET** alarm to occur at the conclusion of POST after performing the Watchdog test, Battery Duration test, or any other test that which causes the ventilator to go inoperative (other than pressing and holding the On/Standby button). Press the Silence/Reset button twice to clear the alarm.

B) With this charged battery, remove external power and allow ventilator to operate continuously, using the following settings: **Mode:** Volume, Assist/Ctrl **Breath Rate:** 15 **Tidal Volume:** 800 **Insp. Time:** 1.5 sec **PEEP:** 5	• Unit must operate continuously for a minimum of 40 minutes.
C) Disconnect the Internal Battery and reconnect external power.	• Battery Charge LED is red.
D) Reconnect the Internal Battery.	• Battery Charge LED is flashing amber for a few minutes (maximum 1 hour), and then goes solid amber.
3) Perform an external power test.	
A) Connect the external AC adapter to the ventilator.	• Ventilator runs normally. • External Power LED shows green. • Charge Status LED is lit.
B) Connect an external DC power source with a voltage between 14.8V and 15.0V, using the external battery test cable.	• Ventilator runs normally. • External Power LED shows green. • Charge Status LED is lit.
C) Slowly reduce the external DC voltage until the external power LED shows amber.	• Ventilator runs normally. • External voltage is 11.5V ± 2% • Charge Status LED is lit. • A **POWER LOW** alarm occurs. • Audible alarm sounds.

D) Slowly reduce the external DC voltage until the external power LED shows extinguishes.	• Ventilator runs normally.
	• External voltage source for ventilators with:
	  • Power board P/N 10134 - 8.94V to 9.63V
	  • Power board P/N 11511 - 8.94V to 9.63V
	  • Power board P/N 15000 - 9.5V ± 2%
	• Charge Status LED is off.
	• A **POWER LOST** alarm occurs.
	• Audible alarm sounds.
	• Battery Level LED is lit.

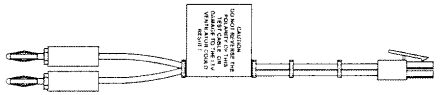

Internal Battery Test Cable, P/N 11472

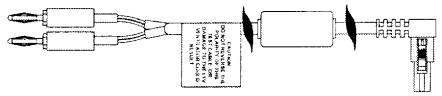

External Battery Test Cable, P/N 11474

Power Checkout Worksheet

SERIAL NUMBER: _____ CONDUCTED BY: _____

MEMORY BOARD SOFTWARE VER.: _____ DATE: _____

TEST DESCRIPTION	STEP #	MEAS. VALUE	REQUIREMENT	PA FA
Battery Level Test				
Replace battery with DC voltage source between 14.8V and 15.0V	1)A)		Normal operation	
			Battery Level LED is green	
			No alarms activate	
Slowly reduce voltage until battery LED changes to amber.	1)B)		Normal operation	
			DC voltage source is 11.9V ± 2%	
			BAT LOW and Audible Alarm	
Slowly reduce voltage until battery LED changes to red.	1)C)		Normal operation	
			DC voltage source is 11.5V ± 2%	
			BAT EMPTY and Audible Alarm	
Slowly reduce voltage until battery level LED changes extinguishes.	1)D)		DC voltage source for ventilators with: • Power board P/N 10134 - 9.4V to 10.4V • Power board P/N 11511 - 9.4V to 10.4V • Power board P/N 15000 - 10.0V ± 2%	
			Vent Inop LED illuminated.	
			Audible alarm sounds.	
Remove DC voltage source and reconnect the Internal Battery.	1)E)			
Battery Duration/Battery Charge Test				
Run unit from battery until it shuts down. Charge from external power while operating for 8 hours.	2)A)			
Remove external power and operate unit from Internal Battery. Use settings: **Mode:** Volume, Assist/Ctrl **Breath Rate:** 15 **Tidal Volume:** 800 **Insp. Time:** 1.5 sec **PEEP:** 5	2)B)		Normal operation from Internal Battery for minimum of 40 minutes.	
Disconnect the Internal Battery.	2)C)		Battery Charge LED is red	
Reconnect the Internal Battery. Turn ventilator on.	2)D)		Battery Charge LED is flashing amber for a few minutes, and then goes solid amber.	
External Power Test				
Connect external AC adapter	3)A)		Normal operation	
			External Power LED is green	
			Charge Status LED is lit	
Connect an external DC power source with a voltage between 14.8V and 15.0V	3)B)		Normal operation	
			External Power LED is green	
			Charge Status LED is lit	

TEST DESCRIPTION	STEP #	MEAS. VALUE	REQUIREMENT	PA F
Slowly reduce the external DC voltage until the external power LED shows amber.	3)C)		Normal operation	
			External voltage is 11.5V ± 2%	
			Charge Status LED is lit	
			POWER LOW and Audible Alarm	
Slowly reduce the external DC voltage until the external power LED shows extinguishes.	3)D)		Normal operation	
			External voltage for ventilators with, • Power board P/N 10134 - 8.94V to 9.63V • Power board P/N 11511 - 8.94V to 9.63V • Power board P/N 15000 - 9.5V ± 2%	
			Charge Status LED is off	
			POWER LOST and Audible Alarm	
			Battery Level LED is lit	

Performance Checkout

Tools Required:
• Turbine Pressure Test Adapter[92], P/N 11567 • Oxygen Analyzer • 0-50 PSIG O_2 Supply • 0-50 cmH_2O Air Supply

When doing a performance checkout, always:

1) Allow the vent to warm up by operating at nominal settings for 1 hour before beginning the performance checkout.
2) After changing the control values for each test, allow ventilator to operate for 3 minutes.

To do a performance checkout:

1) Set PEEP to 5 cmH_2O and perform a tidal volume test.

   Note: If a 1-liter test lung is used, perform these tests with a Tidal Volume of 750 ml, Insp. Time of 3.0 sec. and verify measured Tidal Volume is 750 ± 75 ml.

A) Set Tidal Volume to 1500, Breath Rate to 6 and Insp Time to 6.0 sec.	• Measured volume must be 1500 ± 150 ml. • Monitored tidal volume must be ±15% of measured volume[93].
B) Set Tidal Volume to 1500 ml, Breath Rate to 8, and Insp Time to 3.0 sec.	• Measured volume must be 1500 ± 150 ml. • Monitored tidal volume must be ±15% of measured volume[93].
C) Set Tidal Volume to 1500 ml, Breath Rate to 10, and Insp Time to 1.5 sec.	• Measured volume must be 1500 ± 150 ml. • Monitored tidal volume must be ±15% of measured volume[93].

2) Perform a breath rate test.

A) Set Tidal Volume to 1500, Breath Rate to 10 and Insp Time to 3.0 sec.	
B) Measure the period between the start of two consecutive breaths.	• Measured interval must be 6.0 ± 0.5 sec.

3) Perform a pressure control test. [94]

A) Set Pressure Control to 50 cmH_2O and select Pressure Mode. Set the RISE TIME under the VENT OP menu as required (1 through 9, depending on Test Lung used), to achieve 50 cmH_2O pressure.	
B) Measure the steady-state pressure during inspiration (measured from 0 pressure baseline).	• Measured steady-state pressure must be 50 ± 4 cmH_2O.

4) Perform a sensitivity test – **Software versions 1.57 and Lower.**

A) Set Sensitivity to 2 lpm. Set PEEP to 5 cmH_2O. Set Pressure Support[95] to 5 cmH_2O.	• Verify the ventilator does not auto cycle.
B) Manually open the bellow of the test lung.	• Verify the Patient Effort LED flashes. • Verify a breath is delivered.
C) Set the Sensitivity to 9. Manually open the bellow of the test lung.	• Verify that more effort is required to trigger the Patient Effort LED.

4) Perform a sensitivity test – **Software versions 2.00 and Higher.**

A) Set the ventilator as follows:

- Sensitivity: 2 lpm for LTV® 1000, 950 & 900 -or- 3 cmH_2O for LTV® 800
- PEEP: 5
- Breath Rate: 6
- Tidal Volume: 700
- Inspiration Time: 2.0
- Control Mode: Volume

B) Set Leak Compensation OFF[96]:	
Press and **hold** the SELECT key	• Status monitor window displays ALARM OP
Rotate SET VALUE knob	• Status monitor window displays VENT OP
Press SELECT key and rotate SET VALUE knob	• Status monitor window displays LEAK COMP
Press SELECT key and rotate SET VALUE knob	• Status monitor window displays COMP OFF

[92] The Turbine Pressure Test Adapter is available separately or as part of the Maintenance Calibration Kit, P/N 11566.

[93] Not applicable to the LTV® 800

[94] Pressure Mode and Pressure Control setting only apply to the LTV® 1000 and LTV® 950 models.

[95] Not applicable on the LTV® 800 and 900.

[96] Not applicable on the LTV® 800.

Press SELECT key and press CONTROL LOCK key (2) times.	
C) Observe the PATIENT LED on the upper right hand side of the ventilator control panel while creating a 4 lpm leak past the patient wye momentarily during the exhalation portion of the respiratory cycle.	• The PATIENT EFFORT LED should momentarily flash and an inspiration should immediately begin. • If the PATIENT EFFORT LED does not flash and/or an inspiration is not given immediately: This condition constitutes a FAILURE of the sensitivity test.
D) Set Leak Compensation ON[97]:	
Press the SENSITIVITY key and rotate SET VALUE knob	• Status monitor displays "-" (sensitivity deactivated).
Press and **hold** the SELECT key	• Status monitor displays ALARM OP.
Rotate the SET VALUE knob	• Status monitor window displays VENT OF
Press the SELECT key and rotate the SET VALUE knob	• Status monitor window displays LEAK COMP.
Press the SELECT key and rotate the SET VALUE knob	• Status monitor window displays COMP ON.
Press the SELECT key and press the CONTROL LOCK key (2) times.	
E) Create a 4 lpm leak past the patient wye and wait for at least (2) full breath cycles. Set the sensitivity value to 2 lpm. Observe PATIENT LED on the upper right side of the ventilator control panel for at least 30 seconds.	• The PATIENT EFFORT LED should not flash during and following the sensitivity being set to 2 lpm. • If the PATIENT EFFORT LED flashes: This condition represents a FAILURE of the sensitivity test.
F) While monitoring the PATIENT EFFORT LED, disconnect the test lung momentarily **during the exhalation portion** of the breath cycle.	• The PATIENT LED should momentarily flash and an inspiration should immediately begin. • If the PATIENT EFFORT LED does not flash and/or an inspiration is not given immediately after the momentary disconnection of the test lung: This condition represents a FAILURE of the sensitivity test.

5) Perform a PEEP test.

A) Unscrew PEEP valve completely.	• Measured PEEP must be 0 +2/-0 cmH_2O.
B) Tighten PEEP valve completely.	• Measured PEEP must be 20 ± 3 cmH_2O.

[97] Not applicable to the LTV® 800.

6) Perform a real-time transducer test. . Turn the ventilator off. Turn the ventilator on while holding the Select button. Clear the **REMOVE PTNT** alarm, and then turn to the **RT XDCR DATA** menu and press Select. Turn the Set Value knob to display the required data.

Airway Pressure Transducer	
A) Apply 0 cmH_2O to high flow XDCR port.	• **AP** display must read 0 ± 0.5 cmH_2O.
B) Apply 50 cmH_2O to high flow XDCR port.	• **AP** display must read 50 ± 2 cmH_2O.
Flow Transducer Wide[98]	
C) Apply 0 cmH_2O to both flow XDCR ports.	• **FDw** display must read 0 ± 0.5 cmH_2O
D) Apply 15 cmH_2O to high flow XDCR port.	• **FDw** display must read 15 ± 0.5 cmH_2O
E) Apply 15 cmH_2O to high and low flow XDCR port.	• **FDw** display must read 0 ± 0.5 cmH_2O
Flow Valve Differential Transducer	
F) Turn the ventilator off. Turn the ventilator on while holding the Select, Control Lock, and Manual Breath buttons. Clear the **REMOVE PTNT** alarm, then turn to the **VENT MTNCE** menu and press Select.	
G) Press Select to enter the Servo menu, use the Set Value knob to select **ON,** and press Select. Set step position (listed under Tidal Volume) to 500 and turbine speed (listed under High Press Alarm) to 10. Return to the **RT XDCR DATA** menu and view **FVd**.	• **FVd** display must read 0 ± 0.5 cmH_2O
H) Enter the **SERVO** menu and set step position to 100 and turbine speed to 4000. Return to the **RT XDCR DATA** menu and view **FVd**.	• **FVd** display must read >= 14 cmH_2O
O_2 Transducer[99]	
I) Apply 0 PSIG to O_2 inlet port. View the O_2 reading under the RT XDCR DATA menu.	• **O_2** display must read 0 ± 0.5 PSIG

[98] Not applicable to the LTV® 800
[99] LTV® 1000 only

J) Apply 50 PSIG to O_2 inlet port.	• **O_2** display must read 50 ± 2 PSIG

7) Enter the **SERVO** menu. Connect the ventilator to a high pressure oxygen source. Connect an oxygen sensor to the 22 mm outlet port on the right side of the ventilator (for fastest response), or to the Patient Circuit Wye.

Note: Oxygen source and tested O_2% only apply to the LTV® 1000 model. When testing other models, set turbine speed and flow only.

Servo

A) Set flow (listed under Insp. Time) to 10, turbine speed (listed under High Press Alarm) to 4000, and $\%O_2$ to 30, O_2 Inlet to 40 PSI. [100]	• LTV 950 & 900 - Flow must be 10 ± 1.0 lpm[101] • LTV 1000 - Flow must be 10 ± 0.5 lpm [101]. • $\%O_2$ must be 30 ± 3%.
B) Set flow to 10, turbine speed to 5000, and $\%O_2$ to 90, O_2 Inlet to 50 PSI.[100]	• LTV 950 & 900 - Flow must be 10 ± 1.0 lpm[101] • LTV 1000 - Flow must be 10 ± 0.5 lpm[101]. • $\%O_2$ must be 90 ± 5%.
C) Set flow to 50, turbine speed to 4000, and $\%O_2$ to 60, O_2 Inlet to 60 PSI. [100]	• Flow must be 50 ± 7.5 lpm[101]. • $\%O_2$ must be 60 ± 5%.
D) Set flow to 90, turbine speed to 7000, and $\%O_2$ to 90, O_2 Inlet to 50 PSI. [100]	• Flow must be 90 ± 13.5 lpm[101]. • $\%O_2$ must be 90 ± 5%.
E) Set turbine speed (listed under High Press Alarm) to 4000, step position (listed under Tidal Volume) to 500, 02% to 21%, and attach patient outlet port directly to a pressure gauge.	• After pressure stabilizes (2-3 minutes), pressure must be ≥ 55 cmH_2O.

Solenoids

F) Set the step position to 100, turbine speed to 4000, and turn on only the **ExhPilot** solenoid. After reading, turn the **ExhIPilot** solenoid off.	• Pressure at the exhalation drive port must be C cmH_2O before and approximately ≥ 14 cmH_2O after activating the solenoid.

[100] Oxygen source and tested O_2% only apply to the LTV® 1000 model. When testing other models, set turbine speed and flow only.

[101] If Flow is not within the specified limits, recalibrate the Flow Valve (see page 6-22) and repeat the Performance Checkout tests.

G) Set the step position to 100, turbine speed to 4000, and turn only the **Purge** solenoid on. After reading, turn the **Purge** solenoid off.	• For LTV® 1000, 950 and 900, pressure at High and Low flow XDCR ports individually must be 0 cmH_2O before and approximately ≥ 14 cmH_2O after activating the solenoid. • For LTV® 800 with software version 3.12 or higher, pressure at the Patient Pressure port must be 0 cmH_2O before and approximately ≥ 14 cmH_2O after activating the solenoid.
H) Set SERVO to OFF. Apply 15 cmH_2O to the high flow XDCR port, and turn the **Apres** solenoid on. After reading, turn the **Apres** solenoid off.	• **AP** and **FDw**[102] display must read 0 ± 0.5 cmH_2O after activating the solenoid.
I) Apply and maintain 15 cmH_2O pressure to the low and high flow XDCR port, turn the **Purge** solenoid on for 3 sec, and then turn it off[102].	• **FDw** display must not change by more than 0. cmH_2O before and after activating the solenoic
J) Apply 15 cmH_2O to both the low and high flow XDCR ports, and turn the **ExhDiffP** solenoid on. After reading, turn the **ExhDiffP** solenoid off[102].	• **FDw** display must read 0 ± 0.5 cmH_2O before activating the solenoid and must equal **AP** ± 0.5 cmH_2O after.
K) Apply and maintain 15 cmH_2O pressure to the high flow XDCR port[102].	• **FDw** display must read 15 ± 0.5 cmH_2O.

8) Perform a watchdog test[103].

While simultaneously depressing the Control Lock, Manual Breath and Select buttons, turn the ventilator on and enter **VENT MTNCE** by pressing Select. Turn to **WDOG TEST** and press Select.	• Ventilator resets and performs POST.

9) Perform a LTM Compatibility Test – **Software Versions 2.00 and Higher**[104]

A) Set the COM setting in Extended Features to MONITOR	

[102] Not applicable to the LTV® 800

[103] When LTV® software version 3.13 or greater is installed, it is normal for a **RESET** alarm to occur at the conclusion of POST after performing the Watchdog test, Battery Duration test, or any other test that which causes the ventilator to go inoperative (other than pressing and holding the On/Standby button). Press the Silence/Reset button twice to clear the alarm.

[104] Not applicable to the LTV® 800

B) Connect the LTM serial communication cable to the UTT COMM PORT on the left side of the UUT. Connect patient circuit and test lung. Observe the icon for at least 30 seconds to ensure it is not intermittently shown and that a red exclamation mark is not displayed to the right of the LTV icon.	• Display of small LTV icon appears on the LTM. • If the LTV icon is not observed, shown only intermittently, or the red exclamation mark to the right of the LTV icon is observed, then this condition constitutes a FAIL for the LTM compatibility test.
C) Press the wave button on the LTM. Select the wave screen.	• Waveforms are displayed in all three waveform charts. • The Vte value displayed to the left of the lower waveform chart on the LTM must be equal to the value shown in the LTV® status monitor window.
D) Set the Low Minute Volume alarm to 99 lpm.	• Low minute volume alarm will occur. • LTM status bar is flashing red with the text "Low Minute Volume" displayed.
E) Reset the Low Minute Volume alarm by returning the LOW MIN VOL to its previous value and then pressing the SILENCE RESET button twice on the LTV®.	• Verify the red "Low Minute Volume" status bar is removed from the LTM.
F) Disconnect the LTM serial communication cable from the LTV® COMM PORT.	

10) Perform a Flow Valve Leak for I/E Hold – **LTV® 1000 with I/E Hold Feature, only**

A) Using the "three finger mode", enter VENT-MAINTENANCE.	
B) Select SERVO mode.	
C) Set the step position to 0 (in the Tidal Volume window)	
D) Measure the flow at the OUTLET port of the ventilator. Flow must be less than 1 lpm to pass.	

Performance Checkout Worksheet

SERIAL NUMBER:	_____	CONDUCTED BY:	_____
MEMORY BOARD SOFTWARE VER.:	_____	DATE:	_____

TEST DESCRIPTION	STEP #	MEAS. VALUE	REQUIREMENT	PA F.
Tidal Volume[105]				
Settings: Volume, Assist / Control, PEEP=5, TV=1500, BPM=6, Insp Time=6.0 sec	1)A)			
Measured tidal volume			Measured tidal volume = 1500 +/- 150ml	
Monitored tidal volume[106]			Displayed Vte = +/- 15% of measured tidal volume	
Settings: Volume, Assist / Control, PEEP=5, TV=1500, BPM= 8, INSP = 3.0 sec.	1)B)			
Measured tidal volume			Measured tidal volume = 1500 +/- 150ml	
Monitored tidal volume[106]			Displayed Vte = +/- 15% of measured tidal volume	
Settings: Volume, Assist / Control, PEEP=5, TV=1500, BPM=10, INSP = 1.5 sec	1)C)			
Measured tidal volume			Measured tidal volume = 1500 +/- 150ml	
Monitored tidal volume[106]			Displayed Vte = +/- 15% of measured tidal volume	
Breath Rate				
Settings: Volume, Assist / Control, TV=1500, BPM=10, Insp Time=3.0 sec	2)A)			
Period between start of 2 consecutive breaths	2)B)		Measured interval must be 6.0 +/- 0.5 sec.	
Pressure Control[107]				
Settings: Pressure, Assist / Control, P=50, Rise time= "as required"[108]	3)A)			
Steady state pressure during inspiration	3)B)		Measured steady-state pres. = 50 +/- 4 cmH_2O	

[105] If a 1-liter test lung is used, perform these tests with a Tidal Volume of 750 ml, Insp. Time of 3.0 sec. and verify measured Tidal Volume is 750 ± 75 ml.

[106] Not applicable to the LTV® 800

[107] Applicable to LTV® 1000 and 950 only

[108] Set the RISE TIME under the VENT OP menu as required (1 through 9, depending on Test Lung used), to achieve 50 cmH_2O pressure.

TEST DESCRIPTION	STEP #	MEAS. VALUE	REQUIREMENT	PA F
Sensitivity – Software Version 1.57 and Lower				
Settings: Sens=2, PEEP = 5, PS[109] = 5	4)A)		Verify ventilator does not autocycle	
Manually open test lung bellow	4)B)		Verify Patient Effort LED flashes	
Settings: Sens=9 Manually open test lung bellow	4)C)		Verify more effort required to trigger Patient Effort LED	
Sensitivity – Software Version 2.00 and Higher				
Settings: Volume, PEEP= 5, BPM=6, TV=700, Insp Time=2.0,	4)A)			
LEAK COMPENSATION OFF:	4)B)			
Hold SELECT key			Status monitor displays ALARM OP	
Rotate SET VALUE knob			Status monitor displays VENT OP	
Press SELECT and rotate SET VALUE			Status monitor displays LEAK COMP	
Press SELECT and rotate SET VALUE			Status monitor displays COMP OFF	
Press SELECT and press CONTROL LOCK (2) times				
Observe the PATIENT LED on the upper right hand side of the ventilator control panel while creating a 4 lpm leak past the patient wye momentarily during the exhalation portion of the respiratory cycle.	4)C)		The PATIENT EFFORT LED should momentarily flash and an inspiration should immediately begin.	
LEAK COMPENSATION ON[110]:	4)D)			
Press the SENSITIVITY key and rotate SET VALUE knob			Status monitor displays "-" (sensitivity deactivated)	
Hold SELECT key			Status monitor displays ALARM OP	
Rotate SET VALUE knob			Status monitor displays VENT OP	
Press SELECT and rotate SET VALUE			Status monitor displays LEAK COMP	
Press SELECT and rotate SET VALUE			Status monitor displays COMP ON	
Press SELECT and press CONTROL LOCK (2) times				
Create a 4 lpm leak past the patient wye and wait for at least (2) full breath cycles. Set the sensitivity to 2 lpm.	4)E)		The PATIENT EFFORT LED should not flash during and following the sensitivity being set to 2 lpm.	
While monitoring the PATIENT EFFORT LED, disconnect the test lung momentarily **during the exhalation portion** of the breath cycle.	4)F)		The PATIENT LED should momentarily flash and an inspiration should immediately begin.	

[109] Not applicable on the LTV® 800 or 900.
[110] Not applicable on the LTV® 800.

TEST DESCRIPTION	STEP #	MEAS. VALUE	REQUIREMENT	PA F
PEEP				
Minimum PEEP setting	5)A)		Measured PEEP must be 0 +2/-0 cmH_2O	
Maximum PEEP setting	5)B)		Measured PEEP must be 20 +/-3 cmH_2O	
Real Time Transducer Data				
Airway Pressure (AP):				
0 cmH_2O to high flow XDCR port	6)A)		AP display must read 0 +/- 0.5 cmH_2O	
50 cmH_2O to high flow XDCR port	6)B)		AP display must read 50 +/- 2 cmH_2O	
Flow Transducer Wide (FDw):[111]				
0 cmH_2O to both flow XDCR ports	6)C)		FDw display must read 0 +/- 0.5 cmH_2O	
15 cmH_2O to high flow XDCR port	6)D)		FDw display must read 15 +/- 0.5 cmH_2O	
15 cmH_2O to high & low XDCR ports	6)E)		FDw display must read 0 +/- 0.5 cmH_2O	
Flow Valve Differential Pressure:				
At step position 500, turbine speed 10	6)G)		FVd display must read 0 +/- 0.5 cmH_2O	
At step position 100, turbine speed 4000	6)H)		FVd display must read => 14 cmH_2O	
Oxygen Transducer: [112]				
At 0 psig applied to O_2 inlet port	6)I)		O_2 display must read 0 +/- 0.5 psig	
At 50 psig applied to O_2 inlet port	6)J)		O_2 display must read 50 +/- 2 psig	
Servo				
Flow @ 10, Turbine speed 4000, $\%O_2$ @ 30, O_2 inlet pressure 40 psig[112]	7)A)		Flow must be 10 LPM +/- 1.5 lpm	
			$\%O_2$ must be 30 +/- 3%[112]	
Flow @ 10, Turbine speed 5000, $\%O_2$ @ 90, O_2 inlet pressure 50 psig[112]	7)B)		Flow must be 10 LPM +/- 1.5 lpm	
			$\%O_2$ must be 90 +/- 5%[112]	
Flow @ 50, Turbine speed 4000, $\%O_2$ @ 60, O_2 inlet pressure 60psig[112]	7)C)		Flow must be 50 LPM +/- 7.5 lpm	
			$\%O_2$ must be 60 +/- 5%[112]	
Flow @ 90, Turbine speed 7000, $\%O_2$ @ 90, O_2 inlet pressure 50 psig[112]	7)D)		Flow must be 90 LPM +/- 13.5 lpm	
			$\%O_2$ must be 90 +/- 5%[112]	
Turbine speed 4000, step position 500, O_2 = 21%, patient outlet port attached to pressure gauge	7)E)		Pressure must =/> 55 cmH_2O after 2-3 min. stabilizing time	

[111] Not applicable to the LTV® 800
[112] Applicable on LTV® 1000 only

TEST DESCRIPTION	STEP #	MEAS. VALUE	REQUIREMENT	P /
Solenoids				
Step position 100. turbine speed 4000	7)F)			
ExhPilot solenoid deactivated (OFF):			Pressure at exhalation drive port must be = 0 cmH_2O	
ExhPilot solenoid activated (ON):			Pressure at exhalation drive port must be =>14 cmH_2O	
Step position 100. turbine speed 4000	7)G)			
Purge solenoid deactivated (OFF):			For LTV® 1000, 950 & 900. pressure at High & Low flow transducer ports = 0 cmH_2O For LTV® 800 with software version 3.12 or higher, pressure at the Patient Pressure port = 0 cmH_2O	
Purge solenoid activated (ON):[113]			For LTV® 1000, 950 & 900. pressure at High & Low flow transducer ports => 14 cmH_2O For LTV® 800 with software version 3.12 or higher, pressure at the Patient Pressure port => 14 cmH_2O	
15 cmH_2O to high flow transducer port:	7)H)			
Apres solenoid activated (ON):			AP: 0 cmH_2O +/- 0.5 after activation	
			FDw[113]: 0 cmH_2O +/- 0.5 after activation	
15 cmH_2O to low & high flow transducer ports: [113] Pinch off inlet pressure, purge solenoid activated for 3 sec., then deactivate.	7)I)			
Calculated change in Pressure:			FDw display must not change by more than 0.5 cmH_2O before and after activating solenoid[113]	
15 cmH_2O to low & high flow transducer port: [113]	7)J)			
ExhDiffP solenoid deactivated (OFF):			FDw display must read 0 +/- 0.5 cmH_2O[113]	
ExhDiffP solenoid activated (ON):			FDw display must read 15 +/- 0.5 cmH_2O[113]	
15 cmH_2O to high flow transducer port: [113]	7)K)			
Pinch off the input pressure line			FDw display must read 15 +/- 0.5 cmH_2O[113]	

[113] Not applicable to the LTV® 800

TEST DESCRIPTION	STEP #	MEAS. VALUE	REQUIREMENT	P /
Watchdog Check				
Watch Dog activated	8)		CHECK: Unit shuts downs then restarts	
LTM Compatibility Test – 2.00 and Higher[114]				
Set COM setting to MONITOR	9)A)			
Connect the LTM serial com cable to the UTT COM PORT Connect patient circuit and test lung.	9)B)		Display of small LTV icon (steady and without exclamation point) appears on LTM	
Press the wave button and select the wave screen	9)C)		3 waveforms are displayed VTE value on LTM is equal to value in LTV® status monitor	
Set Low Minute Volume alarm to 99	9)D)		LTM status bar flashes red with the text "Low Minute Volume" displayed.	
Reset Low Minute Volume alarm to previous vale and press SILENCE RESET button twice on LTV®	9)E)		Red "Low Minute Volume" status bar is removed from LTM	
Disconnect LTM serial com cable	9)F)			
Flow Valve Leak for I/E Hold – LTV® 1000 with I/E Hold Feature only				
Enter VENT-MAINTENANCE	10)A)			
Select SERVO mode	10)B)			
Set step position to 0	10)C)			
Measure flow at OUTLET port of LTV®	10)D)		Flow must be less than 1 lpm	

[114] Not applicable to the LTV® 800

Oxygen Checkout

1) Perform an oxygen enrichment test[115]. Connect the ventilator to a high pressure oxygen source. Connect a calibrated oxygen sensor to the patient circuit.

Ventilator Settings and Procedure	Performance Requirement
A) Set the ventilator controls to the following: • Set Volume Mode, Assist/Ctrl. • Set Tidal Volume to 1000 ml. • Set Breath Rate to 15 bpm. • Set Insp Time to 1.0 sec. • Set PEEP to 5 cmH_2O. • Set O_2 Inlet pressure to 60 PSIG. • Set $\%O_2$ to 100%.	
B) Allow the ventilator to operate for 1 minute, then check the oxygen concentration.	• Oxygen concentration should be 95% to 100%[116].
C) Set $\%O_2$ to 60%. Allow the ventilator to operate for 1 minute, then check the oxygen concentration.	• Oxygen concentration should be 55% to 65%[116].
D) Set $\%O_2$ to 30%. Allow the ventilator to operate for 1 minute, then check the oxygen concentration.	• Oxygen concentration should be 27% to 33%[116].
E) Set $\%O_2$ to 21%. Allow the ventilator to operate for 1 minute, then check the oxygen concentration.	• Oxygen concentration should be 18% to 24%[116].

[115] The oxygen enrichment test applies only to the LTV® 1000.

[116] If oxygen concentration is not within the specified limits and Flow is within specified limits. replace the O2 Blender filter (see page 8-72) and/or and the O2 Blender (see page 8-67) and repeat the Oxygen Checkout tests.

2) Perform an internal oxygen enrichment test. Connect an oxygen sensor to a small tube inserted as described.

A) For the LTV® 1000; Connect the ventilator to a high pressure oxygen source, set the % O_2 to 100%. For the LTV® 900, 950 and 800; Connect the O2 inlet port to an oxygen source providing 0.5 psi of oxygen. With the unit completely assembled (incl. back cover), feed a tube in through the vent on the patient circuit side. End of tube should be inserted 4" inside ventilator. Operate the vent for a minimum of 5 minutes at the required settings.	• $\%O_2$ measurement should be taken from inside the unit at the PCB area • $\%O_2$ measurement must be =/<25%

Oxygen Checkout Worksheet

SERIAL NUMBER: _____ CONDUCTED BY: _____

MEMORY BOARD SOFTWARE VER.: _____ DATE: _____

TEST DESCRIPTION	STEP #	MEAS. VALUE	REQUIREMENT	P/ / F
O_2 Enrichment[117]				
Settings: Volume Mode, Assist/Ctrl Tidal Volume = 1000 ml Breath Rate = 15 bpm Insp Time = 1.0 sec PEEP = 5 cmH_2O O_2 Inlet pressure = 60 psig $\%O_2$ = 100%	1)A)			
After 1 minute of operation	1)B)		Oxygen concentration measured by external O_2 monitor = 95% to 100%	
Set O_2% to 60%. After 1 minute of operation	1)C)		Oxygen concentration measured by external O_2 monitor = 55% to 65%	
Set O_2% to 30%. After 1 minute of operation	1)D)		Oxygen concentration measured by external O_2 monitor = 27% to 33%	
Set O_2% to 21%. After 1 minute of operation	1)E)		Oxygen concentration measured by external O_2 monitor = 18% to 24%	
Internal O_2 Enrichment[117]				
Settings: $\%O_2$ = 100% With the unit completely assembled (incl. back cover), feed a tube in through the vent on the patient circuit side. End of tube should be inserted 4" inside ventilator. Operate the vent for a minimum of 5 minutes at the required settings.	2)A)		$\%O_2$ measurement inside the unit at the PCB area $\%O_2$ measurement must be =/< 25%	

[117] Applicable on LTV® 1000 only

24 Hour Burn-in

Tools Required:
• 1 liter or greater test lung

1) Perform a 24 hour Burn-in test.
   - Connect the AC adapter to a valid AC power source.
   - Connect the patient circuit to the ventilator and to a test lung with a compliance of 10 ml/cmH_2O and a resistance of 5 cm/L/sec.
   - Do not connect the Oxygen supply.
2) Power the ventilator up.
3) Set the ventilator controls to the factory default settings (see below).

Front Panel Controls, Default Settings

Control	Default
Breath Rate	12 bpm
Tidal Volume	500 ml
Pressure Control[118]	1 cmH_2O
Inspiratory Time	1.5 sec
Pressure Support[119]	1 cmH_2O
%O_2[120]	21
Sensitivity	2 lpm (LTV® 1000, 950 & 900) 3 cmH_2O (LTV® 800)

Control	Default
High Pres Limit	20 cmH_2O
Low Pres	5 cmH_2O
Low Minute Volume[119]	2.5 lpm
Volume / Pressure Mode[118]	Volume
Ventilation Mode	Assist / Cont
Low Pres O_2 Source[120]	Off
Control Lock	On

Extended Features, Default Settings

Feature	Default
Alarm Volume	85 dBA
Apnea Interval	20 sec
HP Alarm Delay	No Delay
LPP Alarm	All Breaths
Rise Time Profile[119]	4
Var. Flow Term[119]	25%
Var. Time Term[119]	3 sec
PC Flow Term[118]	Off

Feature	Default
Leak Compensation[119]	Off
NPPV Mode	Off
Control Unlock	Easy
Language	English
Com Setting	Monitor (LTV® 1000, 950 & 90 Data (LTV® 800)
Date Format	mm/dd/yy
PIP LED	On[121]

4) Run the ventilator connected to a test lung for 24 hours and verify that no alarms occur.

---

[118] Applicable to LTV® 1000, and 950 only
[119] Not applicable to LTV® 800
[120] Applicable to LTV® 1000 only
[121] In versions of the LTV® software before 00.01.28, the default for the PIP LED was "Off".

24 Hour Burn-in Worksheet

SERIAL NUMBER: _____ CONDUCTED BY: _____

MEMORY BOARD SOFTWARE VER.: _____ DATE: _____

TEST DESCRIPTION	STEP #	MEAS. VALUE	REQUIREMENT	P
24 Hour Burn-in				
Connect AC adapter and test lung.	1)			
Power ventilator up.	2)			
Set the ventilator controls to the factory default settings.	3)			
Run the ventilator connected to a test lung for 24 hours.	4)		Verify that no alarms occur.	

Appendix A - VENTILATOR SPECIFICATIONS

Modes and Breath Types

Breath Types	Volume Control, Pressure Control[122], Pressure Support[123], Spont
Modes	Control, Assist/Control, SIMV, CPAP, NPPV, Apnea Backup

Variable Controls

Control	Range	Tolerance
Backup Pressure Trigger	-3 cmH_2O	± 2 cmH_2O
Breath Rate	"--", 1 to 80 bpm	± 1 bpm or 10% of breath peri whichever is less
Date Format	mm/dd/yyyy, dd/mm/yyyy, yyyy/mm/dd	n/a
Display Select	Toggles between manual or automatic display scrolling and changes monitor displayed.	n/a
Inspiratory/Expiratory Hold[124]	One push toggles monitor window display between normal display, INSP HOLD and EXP HOLD.	
	While INSP HOLD is displayed, a push and hold initiates an Inspiratory Hold.	6 seconds maximum
	While EXP HOLD is displayed, a push and hold initiates an Expiratory Hold.	6 seconds maximum
Inspiratory Time	0.3 to 9.9 seconds	± 0.05 seconds
Leak Compensation[123]	On, Off	n/a
Language	English, Dansk, Deutsch, Español, Francais, Italiano, Portugues, Svenska	n/a
% O_2 (Option)[124]	21% to 100%	$\%O_2$ mean: 21% to 50%: ± 3 absolute 51% to 100%: ± 5 absolute steady-state only
PIP LED Display	On, Off	n/a

[122] Not applicable on LTV® 900 and 800
[123] Not applicable on LTV® 800
[124] Not applicable on LTV® 950, 900 and 800

Variable Controls (cont.)

Control	*Range*	*Tolerance*
Pressure Control[125]	1 to 99 cmH_2O	± 2 cmH_2O or 8% whichever is greater, steady-state only
Pressure Control Flow Termination[125]	On, Off	n/a
Pressure Support[126]	"--", 1 to 60 cmH_2O	± 2 cmH_2O or 8% whichever is greater, steady-state only.
Set Date	01/01/1998 to 12/31/2097	n/a
Set Time	00:00:00 to 23:59:59	n/a
Sensitivity (LTV® 1000, 950 & 900)	1 to 9 lpm, "-"	+ 1/- 0.5 lpm for setting of 1; ± for all other settings.
Sensitivity (LTV® 800)	-2 cmH_2O to 20 cmH_2O	+ 1/- 2 cmH_2O
Tidal Volume	50 to 2000 ml	± 10% or 10 ml, whichever is g for temperatures from 20°C to only, standard atmospheric pr
Variable Flow Termination[126]	10% to 40%	± 15% or 2 lpm whichever is g
Variable Rise Time[126]	1 to 9	0.1 to 1.0 sec
Variable Time Termination[126]	0.3 to 3.0 sec	± 0.1 sec
Bias Flow (LTV® 1000, 950 & 900)	10 lpm during exhalation	± 10% or 1 lpm, whichever is g
Bias Flow (LTV® 800)	2 lpm during exhalation	± 1 lpm

Alarms

Variable Alarms

Control	*Range*	*Tolerance*
Apnea Interval	10 to 60 seconds	± 0.5 seconds
High Pressure Limit	5 to 100 cmH_2O	5 to 20 cmH_2O: ± 2 cmH 21 to 100 cmH_2O: ± 4 cmH
HP Alarm Delay	No Delay, 1 Breath, 2 Breaths	Only audible portion of alarm notification is delayed.
Low Minute Volume[126]	0.1 to 99 liters	± 15% or the measured total b rate times 15 ml, whichever is
Low Peak Pressure	"- - -", 1 to 60 cmH_2O	2 to 20 cmH_2O: ± 2 cmH 21 to 60 cmH_2O: ± 4 cmH
LPP Alarm	All Breaths, VC/PC[126] Only	Select breath types Low Press alarm applies to.

[125] Not applicable on LTV® 900 and 800
[126] Not applicable on LTV® 800

Alarms (cont.)

Fixed Alarms

Control	*Range*	*Tolerance / Indicat*	
Default Settings	EEPROM problem detected	n/a	
DISC/SENSE (Low Pressure Sense Line Disconnect) (LTV® 1000, 950 & 900)	Positive (exhaled) airway flow during first 200 ms of inspiration and exhaled tidal volume (Vte) of previous breath is more than 4000 ml	n/a	
DISC/SENSE (High Pressure Sense Line Disconnect) (LTV® 1000, 950 & 900)	Airway pressure changes by ≤ 1 cmH_2O during 200 ms after inspiratory start OR After initial 200 ms of inspiration airway pressure drops below 0.125 cmH_2O and can't be raised more than 0.5 cmH_2O in next 500 ms	± 0.5 cmH_2O n/a	
DISC/SENSE (Patient Pressure Sense Line Disconnect) (LTV® 800)	Airway pressure changes by ≤ 1 cmH_2O during 200 ms after inspiratory start OR After initial 200 ms of inspiration airway pressure drops below 0.125 cmH_2O and can't be raised more than 0.5 cmH_2O in next 500 ms	n/a	
External Power Lost	<9.5 V	± 2%	
Hardware Fault	Hardware problem detected	n/a	
Internal Battery Empty	< 11.5 V	± 2%	Battery L LED Red
Internal Battery Low	< 11.9 V	± 2%	Battery L LED Amb
Oxygen Inlet Pres. High[127]	High pres source: 75 PSIG Low pres source: 10 PSIG	± 2 PSIG ± 1 PSIG	
Oxygen Inlet Pres. Low[127]	< 35 PSIG	± 2 PSIG	
Reset	Processor problem detected	n/a	
Transducer Fault	Autozero value outside manufacturer's specifications	n/a	

[127] Not applicable on LTV® 950, 900 and 800

Alarms (cont.)

Volume

Alarm Volume	60 to 85 dBA at one meter	± 5 dBA

Inop

Ventilator Inop	Immediately upon a Ventilator **INOP** condition, the audible indi will begin sounding with a steady tone and the **Vent INOP** LEI illuminate. Depressing the Alarm Silence/Reset button will sile audible indicator.

Mechanical Controls

Control	Range	Tolerance
Over Pressure Relief	110 cmH_2O	± 10 cmH_2O measured with 10 lpm of continuou
PEEP/CPAP	0 to 20 cmH_2O	Uncalibrated
Sub-Ambient Relief	Pressure Drop: ≤ 5 cmH_2O	at 50 lpm

Internal Compliance

Compliance	< 0.1 mL/cm

Monitors

Monitor	Range	Tolerance
Calculated Peak Flow	10 to 100 lpm	2 lpm or ± 10%, whichever is grea
Exhaled Tidal Volume[128]	0 to 4000 ml	± 15% or 15 ml, whichever is grea
I:E Ratio, Measured	99:1 and 1:99 Based on the measured inspiratory / exhalation times	Accuracy for times are ±50 ms or whichever is greater
Mean Airway Pressure	0 to 99 cmH_2O	± 2 cmH_2O or 10%, whichever is
Peak Inspiratory Pressure	0 to 120 cmH_2O	± 2 cmH_2O or 5%, whichever is g
PEEP	0 to 99 cmH_2O	± 2 cmH_2O or 10%, whichever is
Total Breath Rate	0 to 250 breaths per minute	± 1 bpm or within 5% of the breat period, whichever is greater
Total Minute Volume[128]	0 to 99.9 liters	± 15%, or the measured total brea times 15 ml, whichever is greater

[128] Not applicable on LTV® 800

Button Controls

Display	Function
Control Lock	Locks Front Panel controls. can be set to Easy or Hard unlock
Manual Breath	Generates a machine breath
Standby / On	Puts ventilator in On or Standby state
Low Pressure O_2 Source[129]	Selects Low Pressure O_2 Source
Silence / Reset	Silences and resets alarms

Displays

Display	Range	Tolerance
Airway Pressure	-10 to 108 cmH_2O	$\pm$ 3 cmH_2O or 5%, whichever is g
Display Window	12 characters	n/a
Patient Effort	Green LED	n/a
Vent Inop	Red LED	n/a
External Power	Amber / Green LED	n/a
Charge Status	Red / Amber / Green LED	n/a
Battery Level	Red / Amber / Green LED	n/a
Usage Meter		
Usage Meter	1 to 139.000 hrs	Below 100 hrs: $\pm$ 10% Above 100 hrs: $\pm$ 5%

Packaging

Size	3" x 10" x 12" -OR- 3.25" x 10.5" x 13.5" with Protective Boots insta
Weight (LTV® 1000, 950 & 900)	13.4 lbs -OR- 14.4 lbs with Protective Boots installed.
Weight (LTV® 800)	13.1 lbs -OR- 14.2 lbs with Protective Boots installed.

Sound Level

Sound Level	Shall not exceed 50 dBA (RMS) at one meter

[129] Not applicable on LTV® 950, 900 and 800

Storage and Operating Conditions

Specification		Tolerance
Storage[130]		
Temperature	-20 to +60 degrees C	n/a
Humidity	10% to 95% Relative, non-condensing	n/a
Operating		
Temperature	+5 to +40 degrees C	n/a
Humidity	15% to 95% Relative, non-condensing	n/a
Orientation		
The ventilator functions within its performance specifications when operated in any orientation.		
Inlet Air Filtration		
The ventilator air filter is removable and cleanable by the operator. All filter materials are FDA compliant for breathing circuits and meet burn requirements for UL 94HB.		
Oxygen Inlet		
DISS Connector Inlet Pressure Range[131]	40 to 70 PSIG	± 2 PSIG
Tapered Tubing Connector Inlet Pressure Range	0 to 10 PSIG	± 2 PSIG
Shock and Vibration		
The ventilator is designed to withstand shock and vibration in accordance with relevant requirer set forth in the following standards:		
IEC 68-2-27	Shock	
IEC 68-2-6	Vibration	
IEC 68-2-34	Vibration	
MIL-STD-810E	Shock, Ground Transport and Helicopter Transport Vibration	
Spillage		
The ventilator resists fluid spillage when tested in accordance with the relevant standards speci IEC 601-1 Clause 44.3.		
External Surface Temperature		
External surfaces	< 50°C, ambient temperature of 35°C	n/a

[130] LTV® Ventilators stored at temperatures outside of the specified Operating Temperature range are to be allowed to stabilize to within the operating temperature range before turning the ventilator on.

[131] Not applicable on LTV® 950, 900 and 800.

Communications

Port	Connector	Specification
Communications	RS232, DB9 connector	Protocol Options: Data, Monitor[132], Print Modem
Patient Assist Call / Remote Alarm	RJ11-4	Closed contact resistance: ≤ 1 ohm

Equipment Classification

Classification	The ventilator is rated as Class II equipment per IEC 601-1 Clause 6.11
Type	The ventilator is specified as Type BF equipment per IEC 601-1 Clause 6

Power

Feature	Range	Tolerance / Indicators	
Input Voltage	11 to 15 VDC		
External Power			
AC Adapter	Input: 90 to 250 VAC, 47 to 63 Hz Output: 12.8 VDC	± 2.5%	
Full Power	Voltage ≥ 11.8 V	± 2%	Green LED
Low Power	Voltage < 11.8V and ≥ 11.0V	± 2%	Amber LED
External Power Off	Voltage < 11.0V	± 2%	LED off, switch to
Hysterisis	Ventilator shall not resume external power operation unless voltage is 11.5V.	± 2%	
Nominal Current Draw	Startup: 5.5 amps Running: 3-4 amps		
Nominal Power Draw	Startup: 66 watts Running: 36 - 48 watts		
Leakage Current	Total leakage current to Earth ground for the ventilator with only app accessories attached, shall not exceed 500 microAmps during norm operation, per IEC 601-1. Total leakage current to Earth ground for the ventilator shall not exc one milliAmp when any single fault condition is present, per IEC 601		
Ground Resistance	Total impedance between the ground contact at the inlet power conr and any accessible metal part shall not exceed 0.1 ohm, per IEC 60		
Dielectric Strength	The ventilator shall be able to survive 1500 volts applied from either of the AC power inlet to Earth ground for a period of one minute, per 601-1.		

[132] Not applicable on LTV® 800

Power (cont.)

Internal Battery

Feature	Range	Tolerance / Indicat
Full Power	Green LED	
Medium Power	Amber LED	
Low Power	Red LED	
Charge Time	Battery shall be capable of being >90% charged within 8 hours, from fully discharged state to state indicated by green charge status LED.	When external power is present, and the vent is at the nominal load
Charge Status	Pre-Charge Qualification: Battery Charging: Battery >90% Charged: Battery Fault:	Flashing Amber LED Amber LED Green LED Red LED
Hysterisis	Ventilator shall not resume battery operation unless the battery voltage level is 11.8 V.	± 2%
Minimum Battery Duration	60 min	Nominal Load: Mode PEEP Breath Rate (bpm) $\%O_2$[133] Tidal Volume (ml) Lung Compliance (ml/cmH_2O) Insp. Time (sec) ET Resistance (cmH_2O/L/S) Sensitivity (lpm) (LTV® 1000, 950 & 900) Sensitivity (cmH_2O) (LTV® 800) Battery Temp.
DOT Requirements	Unregulated, meets the requirements of 49 CFR 173. 159 (d).	

Agency Requirements

Regulatory Requirements

FDA Draft Reviewer Guidance for Ventilators, July, 1995.

Shipping Requirements

The ventilator, packed in its shipping container, shall conform to the International Safe Transit Association requirements for packaged products weighing less than 100 pounds.

[133] Not applicable on LTV® 950, 900 and 800

Appendix B - GLOSSARY

TERM	DEFINITION
AC	Alternating Current.
Airway Circuit	The airway tubing that connects the ventilator and the patient.
Airway Pressure	The airway pressure measured at the exhalation valve.
Airway Pressure Display	A bar graph type display composed of 60 LEDs. This display shows the real-time airway circuit pressure from –10 cmH_2O to 108 cmH_2O.
Alarm	An audible and visual notification that an alarm condition has been m Audible notification includes an oscillating or continuous tone. Visual notification may include flashing displays, illuminated LEDs, and text messages shown in the display window.
Apnea	Apnea occurs when the time between breath starts exceeds the set apnea interval.
Apnea Backup Ventilation	Apnea Backup Ventilation begins when an apnea alarm occurs and continues until the patient initiates 2 consecutive breaths or the alarm canceled by an operator. Apnea Backup Ventilation is given in the Assist / Control mode.
Apnea Interval	The maximum period of time allowed between breath starts. If the tin between breath starts exceeds this interval, an Apnea alarm occurs.
Assist / Control Mode	A mode of ventilation where the patient receives a minimum number machine and assist breaths. The available breath types are Volume Control and Pressure Control.
Assist Breath	A volume or pressure breath that is initiated by the patient, and controlled and cycled by the ventilator. Assist breaths may occur in Assist / Control and SIMV modes.
Autozero	The process of determining the transducer zero offset for ambient pressure.
Bias Flow	A continuous flow of gas through the airway circuit during the exhalation phase of the breath.
bpm	Breaths Per Minute.
Breath Period	The length of time between machine initiated breaths. The Breath Period is determined by the Breath Rate setting. For example, a Brea Rate of 6 would give a Breath Period of 10 seconds (60 seconds / 6 bpm).
Breath Rate, monitored (f)	The number of breaths given in a minute, including machine, assist, and patient breaths.
Breath Rate, set	The minimum number of machine breaths given in a minute.
BTPD	Body Temperature, Pressure Dry.
Circuit	See Airway Circuit.
Circuit Pressure	See Airway Pressure.

TERM	DEFINITION
cmH_2O	Centimeters of water pressure. A unit of measure for pressure.
Control Mode	A mode of ventilation where the patient receives a fixed number of machine breaths. In Control Mode, patient triggers are not allowed.
CPAP	Continuous Positive Airway Pressure. A positive pressure continually applied throughout the breath cycle.
CPAP Mode	A mode of ventilation where the patient triggers all breaths. Available breath types are Pressure Support and Spontaneous.
Display Window	A set of 12 dot-matrix displays used to show monitored data, alarm messages and Extended Feature menu items.
EEPROM	Electrically Erasable Programmable Read Only Memory. A type of memory that is used by the ventilator to maintain calibration data, control setting and other data when power is not applied to the ventilator.
Event	Any condition noted in the ventilator's event trace. This may include both error conditions and normal operational events.
Exhaled Tidal Volume	See Tidal Volume.
Expiratory Hold	A maneuver which holds the expiratory phase of a delivered breath fo a duration sufficient to determine the AutoPEEP of a patient.
Extended Features	A set of ventilator controls and options that are not associated with Front Panel controls. Extended Features are accessed through a me shown in the display window.
f	See Breath Rate, monitored.
Flow	The rate at which gas is delivered to the patient, measured in lpm.
Flow Trigger	A patient effort in which the amount of bias flow diverted into the patient's lungs exceeds the Sensitivity setting. A flow trigger will resu in delivery of an Assist or Patient breath, according to the ventilation mode.
I:E Ratio, monitored	The ratio of inspiratory time to exhalation time for a breath. The smal value is normalized to 1.
in-oz	Inch ounces. A measurement of torque.
Inspiratory Hold	A maneuver which holds the inspiratory phase of a volume delivered breath for a duration sufficient to determine **Δ Pres** pressure and sta lung compliance of the patient.
L	Liters. A unit of measure for volume.
Leak Compensation	Leak Compensation improves triggering when a circuit leak is presen
LED	Light Emitting Diode. An indicator that is illuminated on the Front Panel.
lpm	Liters Per Minute. A unit of measure for flow.

TERM	DEFINITION
Machine Breath	A volume or pressure breath that is initiated by the operator or the ventilator, and is controlled and cycled by the ventilator. Machine Breaths may occur in Control and Assist / Control modes. The opera may cause a machine breath in any mode using the Manual Breath Button.
Manual Breath	A Machine Breath initiated by the operator pressing the Manual Breat Button.
MAP	See Mean Airway Pressure.
Mean Airway Pressure, monitored (MAP)	Mean Airway Pressure. MAP is calculated for the most recent 60 seconds and is updated every 10 seconds.
Minimum Exhalation Time	The minimum time required for exhalation is 250 msec. Control settings are limited to ensure the Minimum Exhalation Time is provide Breaths may not be triggered during the Minimum Exhalation Time.
Minimum Inspiratory Time	The minimum time required for inspiration is 300 msec. Control settings are limited to ensure the Minimum Inspiratory Time is provide
Minute Volume, monitored (VE)	The average volume delivered to the patient for the last 60 seconds. VE is updated at the end of each breath and is calculated based on th last 8 breaths. All breath types are included.
msec	One one-thousandth of a second.
Nm	Newton meters. A measurement of torque equivalent to 0.007062 inc ounces.
Non Volatile Memory	Memory that is retained when ventilator is in Standby mode or powere off.
O_2	Oxygen.
Patient Breath	A Pressure Support or Spontaneous breath that is initiated by the patient, controlled by the ventilator and terminated by the patient. Patient breaths may occur in SIMV and CPAP ventilation modes.
Patient Effort	Any inspiratory effort by the patient.
Peak Inspiratory Pressure, monitored (PIP)	The maximum circuit pressure occurring during the inspiration and firs 300 ms exhalation phase of a breath. PIP is measured at the patient wye.
PEEP	See Positive End Expiratory Pressure.
PIP	See Peak Inspiratory Pressure.
Positive End Expiratory Pressure, monitored (PEEP)	The circuit pressure measured at the end of the exhalation phase. PEEP is set using the mechanical PEEP valve on the exhalation valve

TERM	DEFINITION
POST	Power On Self Tests. A set of self-tests the ventilator performs when turned on to verify the operational integrity of the Processor, Displays Audible Alarm, Confirming Audible Chirp[134], SRAM, Program Memory and EEPROM (some tests require operator visual and/or audible verification).
Pressure Control Breath	A machine or assist breath where the circuit pressure is elevated to a user-set pressure for a user-set period of time. Pressure Control Breaths have an optional flow termination criteria.
Pressure Support Breath	A patient breath where the circuit pressure is elevated to a user-set pressure and maintained there until flow decreases to a user-set percentage of the peak flow achieved. Pressure Support Breaths[135] may also be terminated by a user-set maximum time, or by exceeding breath periods.
Pressure Trigger	A patient effort in which the proximal airway pressure dropped to, or below the set Sensitivity setting. A pressure trigger will result in delivery of an Assist or Patient breath, according to the ventilation mode.
PSIG	Pounds per Square Inch Gauge. A unit for measuring pressure. 1 PSIG = 0.7 bar.
rpm	Revolutions per minute. A unit for measuring turbine speed.
Scrolling, Monitor Data Display	Allows the user to display the monitored values statically or automatically scroll them. While scrolling is active, each monitored value will be displayed for 3 seconds then the next value will be automatically displayed.
SIMV	Synchronized Intermittent Mandatory Ventilation.
SIMV Mode	A mode of ventilation where a minimum number of Machine or Assist breaths are given, and the patient is allowed to trigger additional Patie breaths. Available Breath types are Volume Control, Pressure Contrc Pressure Support, and Spontaneous.
Spontaneous Breath	A patient breath where the circuit pressure is elevate to 1 cmH_2O abo PEEP and maintained there until flow decreases to 10% of the peak flow achieved, or 3 lpm. Spontaneous Breaths are also terminated when they exceed 2 breath periods.
Tidal Volume, monitored (Vte)	The exhaled volume measured at the patient wye. Exhaled Volume is measured for all breath types.
Total Breath Rate	See Breath Rate, monitored.
Transducer	An electromechanical device used to measure pressure or flow.

[134] Only applicable on ventilators with Power Board P/N 15000 installed (as indicated by an audio sound symbol (♪) on the back panel label).

[135] Pressure Control and Pressure Support breaths do not compensate for PEEP. Delivered pressure is controlled by the Pressure Control setting and is not affected by the PEEP setting. i.e.: A Pressure Control setting of 20cmH_2O and a PEEP setting of 10cmH_2O results in a maximum delivered pressure of 20cmH_2O.

TERM	DEFINITION
Vcalc	A monitor that displays the calculated peak flow for Volume Control breaths. Vcalc is calculated based on the set Tidal Volume and the S Inspiratory Time.
VE	See Minute Volume, monitored.
Volume Control Breath	A machine or assist breath where a user-set volume is delivered over user-set time. Flow is delivered in a decelerating waveform where th peak and final flows are calculated so that the final flow is 50% of the peak flow.
Vte	See Tidal Volume, monitored.

Appendix D - EVENT TRACE

The Event Trace is a list of events recorded by the ventilator[136]. These events may be normal conditions, such as turning the ventilator on or off, or alarm conditions such as HW FAULT or HIGH PRES.

- Initial occurrences of events are recorded the first time they occur after power up, along with the date, time and associated data, if any.
- A second occurrence of the same type of event (same event code) will be recorded as a separate line item along with the latest date, time and associated data. The quantity of occurrences is increased by one (1) (i.e. a quantity of two (2) will be displayed)).

  Note: Additional occurrences (3rd or more) of the same type of event will update the secondary occurrence line items with the latest date, time, and associated data. The quantity of occurrences will be increased by one (1) for each additional occurrence (i.e. the quantity of 2 will be increased to 3).

To view the events:

1) Enter the Extended Features menu by pushing and holding the Select button for 3 seconds.
2) Turn the Set Value knob until **EVENT TRACE** is displayed.
3) Press the Select button while **EVENT TRACE** is displayed.
   - **xx:eventname** is displayed.
   - **xx** is the chronological number of the event occurrence.
   - **eventname** is the name of the event.
4) Press the Select button.
   - **xx:EyCz** is displayed.
   - **xx** is the chronological number of the event occurrence.
   - **y** is the event code number of the event.
   - **z** is the quantity of occurrences since power up (for software versions 3.01 or earlier);
     - For software version 3.11, a quantity of 1 is displayed in the initial occurrence recordings and a quantity of 2 or more in the secondary occurrence recordings of the same type of event.
5) Press the Select button.
   - **xx:eventdate** is displayed.
   - **xx** is the chronological number of the event occurrence.
   - **eventdate** is the date[137] of the first occurrence (for software versions 3.01 or earlier);
     - For software version 3.11, the date of the first occurrence is displayed in the initial occurrence recordings and the date of the latest occurrence in the secondary occurrence recordings of the same type of event.

---

[136] For downloading the Event Trace to a PC, a Service Cable (P/N 11485). is available. The cable may be ordered separately or as part of the Maintenance and Calibration Kit. P/N 11566.

[137] Date is displayed in the currently selected date format.

6) Press the Select button.
   - **xx:hh:mm:ss** is displayed.
   - **xx** is the chronological number of the event occurrence.
   - **hh:mm:ss** is the time of the first occurrence (for software versions 3.01 or earlier);
     - For software version 3.11, the time of the first occurrence is displayed in the initial occurrence recordings and the time of the latest occurrence in the secondary occurrence recordings of the same type of event.
7) Press the Select button.
   - **xx:data** is displayed.
   - **xx** is the chronological number of the event occurrence.
   - **data** is the data associated with the first occurrence of this event (for software versions 3.01 or earlier);
     - For software version 3.11, the data associated with the first occurrence is displayed in the initial occurrence recordings and the data associated with the latest occurrence in the secondary occurrence recordings of the same type of event.

   For some events, the data field will be blank.
8) Press the Select button to return to the initial display.
9) Turn the Set Value knob clockwise or counterclockwise to view other events.
10) To exit the **EVENT TRACE**, turn to **EXIT** and press the Select button or press Control Lock.

For more information about how these codes are used, see the *LTV® Series* or *LTV® 800 Ventilator Operator's Manual* or contact your Service Representative.

Event Codes

This section includes a list of the event codes that can be recorded in the Event Trace.

Event Codes by Code

Code	Event Name	Event	Associated Alarm
01	VENT 1	Power on	None
02	VENT 0	Power off	None
03	HOUR MTR	Set hour meter	None
04	VENT CHK	Set vent check	Entered VENT CHECK m
05	APNEA 1	Apnea mode entered	APNEA
06	APNEA 0	Apnea mode exited	APNEA
07	CIRC DIS	Circuit disconnect occurred	DISC/SENSE
08	HIGH DIS	High side disconnect	DISC/SENSE
09	LOW DIS	Low side disconnect	DISC/SENSE
10	DISC 0	Circuit disconnect exited	DISC/SENSE
11	BATMPT1	Internal battery empty occurred	BAT EMPTY
12	BATMPT0	Internal battery empty exited	BAT EMPTY
13	BATLOW1	Internal battery low occurred	BAT LOW
14	BATLOW0	Internal battery low exited	BAT LOW
15	EXT LST1	External power lost occurred	POWER LOST
16	EXT LST0	External power lost exited	POWER LOST
17	EXT LOW1	External power low occurred	POWER LOW
18	EXT LOW0	External power low exited	POWER LOW
19	XDC FLT1	XDCR fault occurred	XDCR FAULT
20	XDC FLT0	XDCR fault exited	XDCR FAULT
21	O2 LOW 1	O_2 pressure low occurred	LOW O2 PRES
22	O2 LOW 0	O_2 pressure low exited	LOW O2 PRES
23	O2 HI 1	O_2 pressure high occurred	HIGH O2 PRES
24	O2 HI 0	O_2 pressure high exited	HIGH O2 PRES
25	DEFAULTS	Defaults, or Set Defaults occurred	DEFAULTS / DEFAULTS.
26	NO CAL	No calibration data found	NO CAL DATA
27	FAN FLT1	Fan fault occurred	HW FAULT
28	FAN FLT0	Fan fault exited	HW FAULT
29		N/A	
30		N/A	
31	INTRRPT1	Spurious interrupt occurred ms	RESET
32	INTRRPT2	Spurious interrupt occurred ls	RESET
33	AD MMTCH	ADC mismatch	HW FAULT
34	AD MTCH1	ADC mismatch occurred	HW FAULT
35	AD MTCH0	ADC mismatch cleared	HW FAULT
36	SYNCER1	Stepper motor lost sync occurred	HW FAULT
37	SYNCER0	Stepper motor lost sync exited	HW FAULT
38	HOME ER1	Stepper motor home failure occurred	HW FAULT

Code	Event Name	Event	Associated Alarm
39	HOME ER0	Stepper motor home failure exited	HW FAULT
40	EEPROM	EEPROM degraded	HW FAULT
41	CRC	Memory CRC check failed	RESET
42	HI PRES1	High pressure occurred	HIGH PRES
43	HI PRES0	High pressure exited	HIGH PRES
44	TBN ISTP	Turbine immediate stop occurred	HIGH PRES
45	TBN ZERO	Turbine set to zero flow occurred	HIGH PRES
46	TBN ESTP	Turbine emergency stop occurred	HIGH PRES
47	LOW VE 1	Low minute volume occurred	LOW MIN VOL
48	LOW VE 0	Low minute volume exited	LOW MIN VOL
49	LO PRES1	Low peak pressure occurred	LOW PRES
50	LO PRES0	Low peak pressure exited	LOW PRES
51	CLR EVNT	Event log cleared	N/A
52	CLR CTRL	Control settings cleared	N/A
53	SET DATE	Date set	N/A
54	SET TIME	Time set	N/A
55		N/A	
56	STACK	Stack overflow detected	RESET
57	POST	POST failure	RESET
58	RUNAWAY	Code runaway detected	RESET
59	WDOG TST	Watchdog test run	Inop
60	CLR CAL	Calibration records cleared	N/A
61	XDCR NAR	Differential pressure transducer - Narrow channel fault	XDC FLT1
62	XDCR WID	Differential pressure transducer - Wide channel fault	XDC FLT1
63	XDCR BI	Differential pressure transducer - Bi-directional channel fault	XDC FLT1
64	XDCR AIR	Airway pressure transducer fault	XDC FLT1
65	ADC1 VAL	AD mismatch primary channel fault value	HW FAULT
66	TBN HSTP	Turbine Hold Stop occurred	HIGH PRES
67	LN VENT1	Shutdown for other than pressing On/Standby button	RESET
68	FLUSH ER	A problem is detected writing data to the EEPROM during system shutdown.	HW FAULT
69	RAC ERR1	Problem detected with primary and/or redundant audible alarm circuitry	HW FAULT
70	RAC ERR0	Recovery from problem detected with primary and/or redundant audible alarm circuitry	HW FAULT
71	SNDRERR1	Alarm sounder error	HW FAULT
72	SNDRERR0	Recovery from alarm sounder error	HW FAULT

Event Codes by Event Name

Event Name	Code	Event	Associated Alarm
	55	N/A	
	30	N/A	
	29	N/A	
AD MMTCH	33	ADC mismatch	HW FAULT
AD MTCH0	35	ADC mismatch cleared	HW FAULT
AD MTCH1	34	ADC mismatch occurred	HW FAULT
ADC1 VAL	65	AD mismatch primary channel fault value	HW FAULT
APNEA 0	06	Apnea mode exited	APNEA
APNEA 1	05	Apnea mode entered	APNEA
BATLOW0	14	Internal battery low exited	BAT LOW
BATLOW1	13	Internal battery low occurred	BAT LOW
BATMPT0	12	Internal battery empty exited	BAT EMPTY
BATMPT1	11	Internal battery empty occurred	BAT EMPTY
CIRC DIS	07	Circuit disconnect occurred	DISC/SENSE
CLR CAL	60	Calibration records cleared	N/A
CLR CTRL	52	Control settings cleared	N/A
CLR EVNT	51	Event log cleared	N/A
CRC	41	Memory CRC check failed	RESET
DEFAULTS	25	Defaults, or Set Defaults occurred	DEFAULTS / DEFAULTS
DISC 0	10	Circuit disconnect exited	DISC/SENSE
EEPROM	40	EEPROM degraded	HW FAULT
EXT LOW0	18	External power low exited	POWER LOW
EXT LOW1	17	External power low occurred	POWER LOW
EXT LST0	16	External power lost exited	POWER LOST
EXT LST1	15	External power lost occurred	POWER LOST
FAN FLT0	28	Fan fault exited	HW FAULT
FAN FLT1	27	Fan fault occurred	HW FAULT
FLUSH ER	68	A problem is detected writing data to the EEPROM during system shutdown.	HW FAULT
HI PRES0	43	High pressure exited	HIGH PRES
HI PRES1	42	High pressure occurred	HIGH PRES
HIGH DIS	08	High side disconnect	DISC/SENSE
HOME ER0	39	Stepper motor home failure exited	HW FAULT
HOME ER1	38	Stepper motor home failure occurred	HW FAULT
HOUR MTR	03	Set hour meter	None
INTRRPT1	31	Spurious interrupt occurred ms	RESET
INTRRPT2	32	Spurious interrupt occurred ls	RESET
LN VENT1	67	Shutdown for other than pressing On/Standby button	RESET
LO PRES0	50	Low peak pressure exited	LOW PRES
LO PRES1	49	Low peak pressure occurred	LOW PRES
LOW DIS	09	Low side disconnect	DISC/SENSE

Event Name	Code	Event	Associated Alarm
LOW VE 0	48	Low minute volume exited	LOW MIN VOL
LOW VE 1	47	Low minute volume occurred	LOW MIN VOL
NO CAL	26	No calibration data found	NO CAL DATA
O2 HI 0	24	O_2 pressure high exited	HIGH O2 PRES
O2 HI 1	23	O_2 pressure high occurred	HIGH O2 PRES
O2 LOW 0	22	O_2 pressure low exited	LOW O2 PRES
O2 LOW 1	21	O_2 pressure low occurred	LOW O2 PRES
POST	57	POST failure	RESET
RAC ERR0	70	Recovery from problem detected with primary and/or redundant audible alarm circuitry	HW FAULT
RAC ERR1	69	Problem detected with primary and/or redundant audible alarm circuitry	HW FAULT
RUNAWAY	58	Code runaway detected	RESET
SET DATE	53	Date set	N/A
SET TIME	54	Time set	N/A
SNDRERR0	72	Recovery from alarm sounder error	HW FAULT
SNDRERR1	71	Alarm sounder error	HW FAULT
STACK	56	Stack overflow detected	RESET
SYNCER0	37	Stepper motor lost sync exited	HW FAULT
SYNCER1	36	Stepper motor lost sync occurred	HW FAULT
TBN ESTP	46	Turbine emergency stop occurred	HIGH PRES
TBN HSTP	66	Turbine Hold Stop occurred	HIGH PRES
TBN ISTP	44	Turbine immediate stop occurred	HIGH PRES
TBN ZERO	45	Turbine set to zero flow occurred	HIGH PRES
VENT 0	02	Power off	None
VENT 1	01	Power on	None
VENT CHK	04	Set vent check	Entered VENT CHECK r
WDOG TST	59	Watchdog test run	Inop
XDC FLT0	20	XDCR fault exited	XDCR FAULT
XDC FLT1	19	XDCR fault occurred	XDCR FAULT
XDCR AIR	64	Airway pressure transducer fault	XDC FLT1
XDCR BI	63	Differential pressure transducer - Bi-directional channel fault	XDC FLT1
XDCR NAR	61	Differential pressure transducer - Narrow channel fault	XDC FLT1
XDCR WID	62	Differential pressure transducer - Wide channel fault	XDC FLT1

Event Trace Data Definitions

XDC FLT1

Four binary digits, ABCD, where

A represents the Flow Differential narrow **(FDn)** transducer channel

B represents the Flow Differential wide **(FDw)** transducer channel

C represents the Flow Differential bi-directional **(FDb)** transducer channel

D represents the Airway Pressure **(AP)** transducer

and

1 = fault, 0 = okay

For example, 0100 represents a failed autozero on the **FDw** channel.

HOME ER1

-1 or 1, where

-1 represents the clockwise direction

1 represents the counterclockwise direction

AD MMTCH, AD MTCH1

xx = A/D channel, where

0 = Flow Differential Narrow **(FDn)**

1 = Flow Differential Wide **(FDw)**

2 = Flow Valve Differential **(FVd)**

3 = Airway Pressure **(AP)**

4 = Oxygen Pressure **(O2)**

5 = not used

6 = Flow Valve Temperature **(FVt)**

7 = External Voltage **(EV)**

8 = Battery Voltage **(BV)**

9 = not used

10 = Flow Differential Bi-Directional **(FDb)**

11 = V ref/2 signal on Power PCBA

12 = V ref -ve signal on Power PCBA

13 = V ref +ve signal on Power PCBA

yyyy = signed difference of A/D 1 count – A/D 2 count

Appendix E - Reference Information

Conversion Factors

The following Reference Conversion Table provides conversion factors for converting between units.

To use this table:

Move across the table to find the starting unit of measure. Move down the table to reach the ending unit of measure. Multiply the starting unit of measure value by the number provided.

From / To	PSI (lb / in^2)	BAR	Millibar Hectopascal	IN. HG (at 0ºC)	IN. H_2O (at 4ºC)	mmHG (at 0ºC)	mmH_2O (at 4ºC)	cmH_2O (at 4ºC)
PSI (lb / in^2)	1	14.5039	1.4504×10^{-2}	0.491159	3.6127×10^{-2}	1.933368×10^{-2}	1.4223×10^{-3}	1.4223×10^{-2}
BAR	6.8947×10^{-2}	1	1×10^{-3}	3.3865×10^{-1}	2.4908×10^{-3}	1.3332×10^{-3}	9.8068×10^{-5}	9.8068×10^{-4}
Millibar Hectopascal	68.947	1×10^{3}	1	33.865	2.4908	1.3332	9.8068×10^{-2}	0.98068
IN. HG (at 0ºC)	2.0360	29.529	2.9529×10^{-2}	1	7.3552×10^{-2}	3.9368×10^{-2}	2.8959×10^{-3}	2.8959×10^{-2}
IN. H_2O (at 4ºC)	27.680	401.47	0.40147	13.596	1	0.53525	3.9372×10^{-2}	0.39372
mmHG (at 0ºC)	51.7149	750.06	0.75006	25.401	1.8683	1	7.3558×10^{-2}	0.735558
mmH_2O (at 4ºC)	703.08	1.0197×10^{4}	10.197	345.32	25.399	13.595	1	10
cmH_2O (at 4ºC)	70.3	1019.7	1.0197	34.532	2.5399	1.3595	0.1	1

Extended Features Map[138]

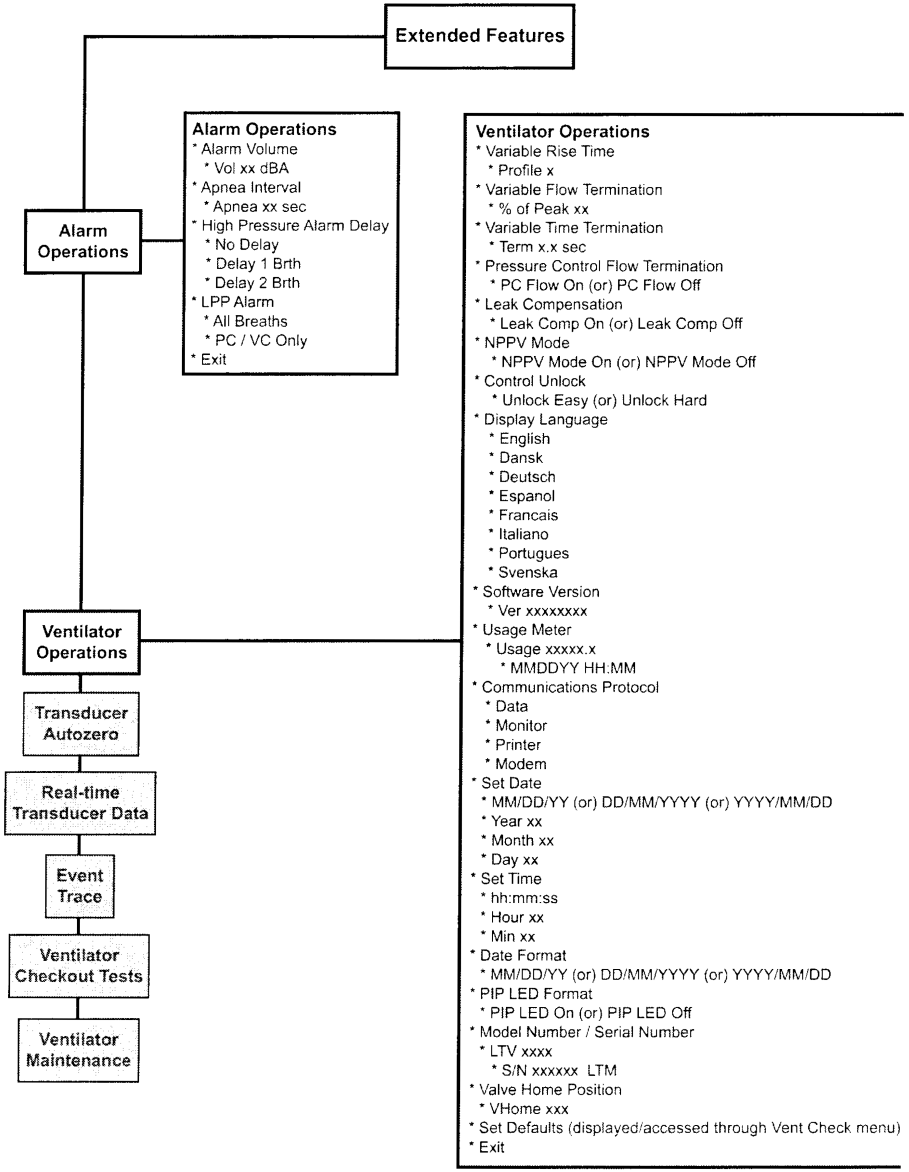

[138] As in LTV® 1000 with software version 3.12 or higher

Extended Features Map[139] (continued)

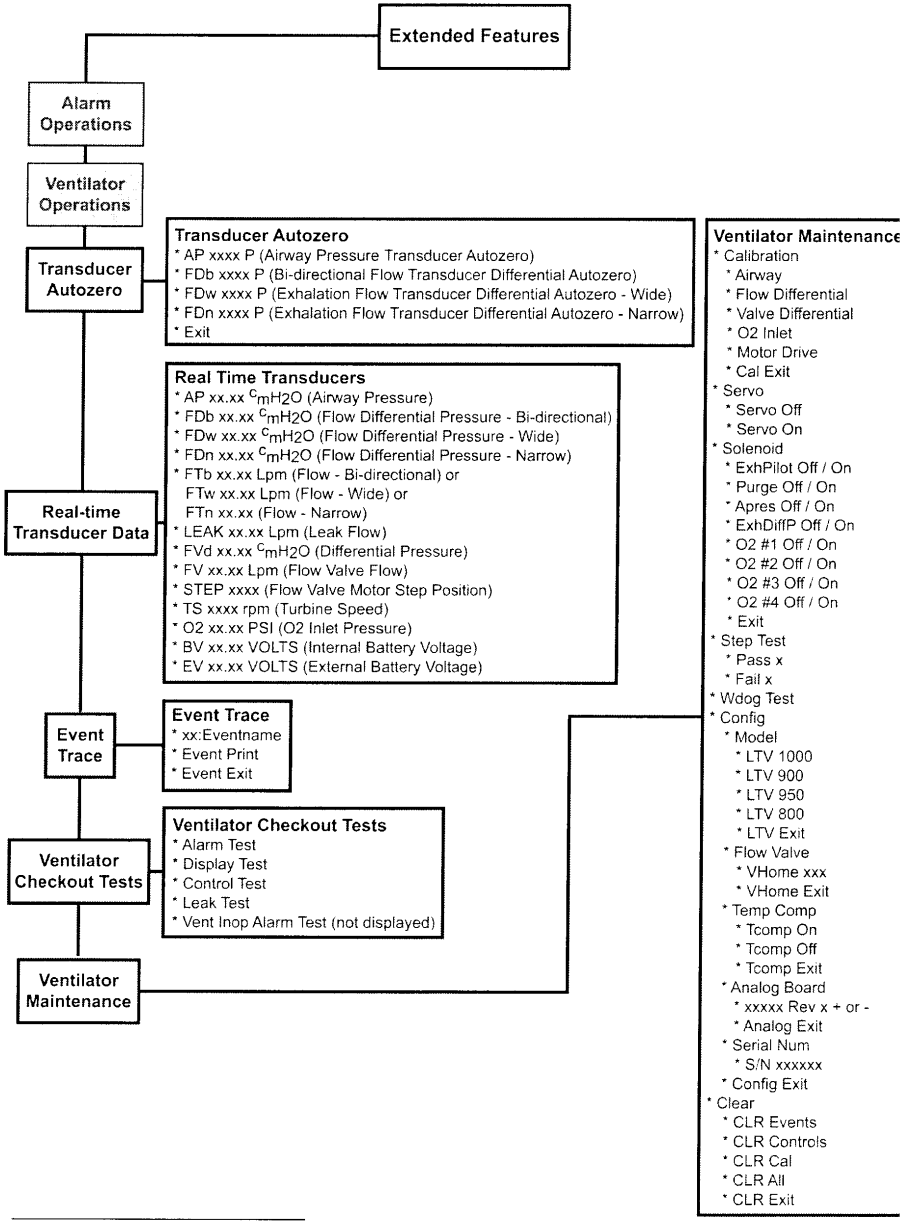

[139] As in LTV® 1000 with software version 3.12 or higher

External Accessories Screw Location, Type and Length

As new features and accessories are made available for the LTV® Series Ventilators, the possible ventilator configurations and modifications to ventilator configurations has also increased. Damage to internal components of the ventilator can result if the wrong length mounting screws are used when permanently (or temporarily) removing or exchanging external accessories.

Refer to the information on the following page to determine the appropriate external accessories mounting screws or accessories replacement mounting screws location, type and length to use when removing or exchanging external accessories on an LTV® Series Ventilator.

WARNING !

- Internal damage to the ventilator may result if the wrong length mounting screws are used.

LTV External Accessories Mounting Screws Location, Type & Le

(Reference Pulmonetic Systems Replacement Screws Kit, P/N 11149)

LTV Ventilator Final Configuration Desired	Screw Location	Qty	Screw Description	Washer Used
Ventilator, with no external accessories installed.	①	3	1/4" Flat-head	None
	②	6	1/4" Flat-head	Finish-washer
	③	2	1/4" Pan-head	None
	④	1	3/16" Pan-head	None
Ventilator, with LTV/LTM Mounting Bracket installed (Ref. P/N 11099 for installation instructions)	①	3	3/8" Pan-head	None
	②	6	1/4" Flat-head	Finish-washer
	③	2	3/8" Pan-head	None
	④	1	5/16" Pan-head	None
Ventilator, with Protective Boots installed (Ref. P/N 11509 for installation instructions)	①	3	1/4" Flat-head	None
	②	6	7/16" Flat-head	Finish-washer
	③	2	5/16" Flat-head	Finish-washer
	④	1	1/4" Flat-head	Finish-washer

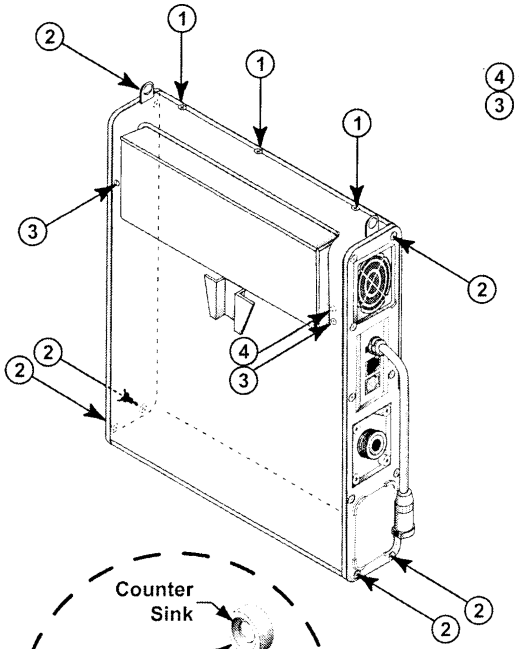

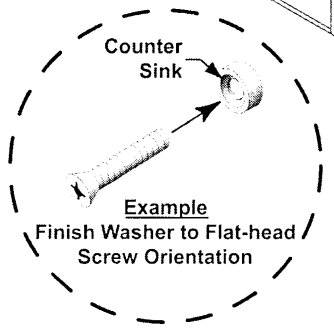

④ - Eariler version LTV ventilator screw locati
③ - Current version LTV ventilator screw loca

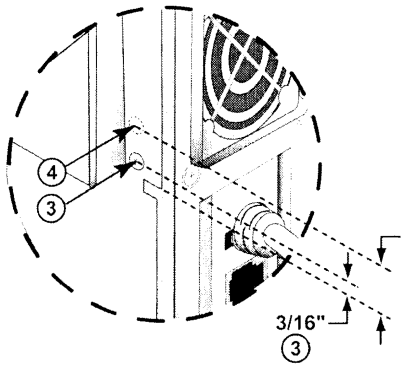

Screw Type/Scale

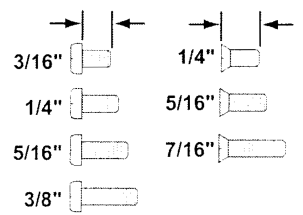

(screws shown actual size)

Input O_2 Flow Chart

Use the Input O_2 Flow Chart to determine the correct O_2 flow for a desired Inspired Oxygen (FIO_2) Concentration.

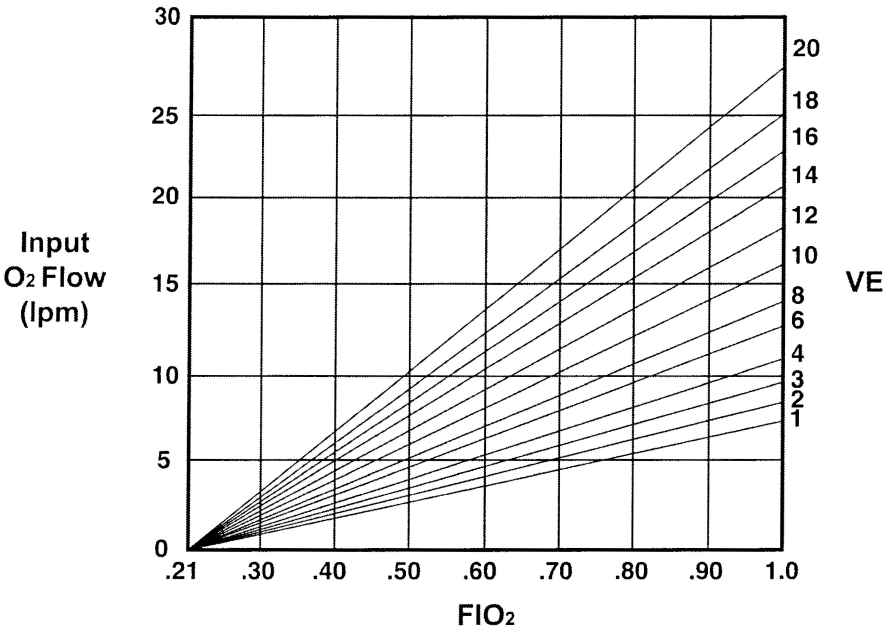

Parts, Replacement

The following Replacement Parts table provides the name and part number of all parts potentially used in the servicing of the LTV® Series Ventilator.

Replacement Part Name	Part Number
• Adhesive, Loctite 4591	10773
• Adhesive, RTV Silicon	10122
• Battery Assembly	10140
• Battery Cover	10102
• Boot, Protective Lower	11420
• Boot, Protective Upper	11421
• Bracket, Electrical Connector Interface	11514
• Bracket, Sounder	10119
• Bumper, Alarm	10573
• Cable, Pigtail Assembly	11498
• Cable, Thermistor	11399
• Clip, Grounding	10752
• Connector, Pisco	10543
• Fan Assembly	10675
• Filter, Inlet Reticulated Foam	10258
• Filter, Interior Inlet	10629
• Filter, Oxygen Blender	14313
• Flow Valve Assembly	10019
• Fuse, Power Board	14314
• Gasket, Conductive Silicon	10882
• Gasket, Sealing	10175
• Grommet, Battery Cover	10541
• Grommet, Damping	10266
• Handle Attachment	10118
• Kit, Dovetail Replacement	11493
• Kit, Internal Battery Replacement	11636
• Kit, LTV® Tubing Enhancement	11684
• Kit, Power PCBA Replacement	14157
• Kit, Power PCBA w/DC Cord Replacement	11590
• Kit, Power PCBA w/Memory Board Replacement	14425
• Kit, Rotary Switch Replacement	14271

Replacement Part Name	Part Number
• Kit, Screws Replacement	11149
• Knob, Rotary Switch	10111
• Label, Battery Replacement	10927
• Label, LTV® Chirp	14392
• Label, Temporary (LTV® Chirp)	14391
• Label, Stepping Motor Connector	11322
• Lubricant, Silicone Gel	10123
• Mounting Block, LTM/ LTV®	11146
• Mounting Bracket, LTM/ LTV®	11125
• Nut, Fan Assembly & Solenoid Manifold Mounting	10342
• O_2 Blender Assembly	10051
• O_2 Inlet Block	10639
• O-Ring, O_2 inlet port	10609
• O-Ring, Rotary Switch	11645
Front Panel Replacement:	
LTV® 800:	
• Switch, Membrane Panel	11806-1
• Overlay Panel English	11806-2
LTV® 900:	
• Switch, Membrane Panel	11406-1
• Overlay Panel English	10641-2
• Overlay Panel Japanese	10641-3
• Overlay Panel Spanish	10641-4
• Overlay Panel German	10641-5
• Overlay Panel French	10641-6
• Overlay Panel Italian	10641-7
• Overlay Panel Portuguese	10641-8
LTV® 950:	
• Switch, Membrane Panel	10953-1
• Overlay Panel English	10953-2
• Overlay Panel Japanese	10953-3
• Overlay Panel Spanish	10953-4
• Overlay Panel German	10953-5
• Overlay Panel French	10953-6
• Overlay Panel Italian	10953-7

Replacement Part Name	Part Number
• Overlay Panel Portuguese	10953-8
LTV® 1000 (without I/E Hold):	
• Switch, Membrane Panel	10114-1
• Overlay Panel English	10114-2
• Overlay Panel Japanese	10114-3
• Overlay Panel Spanish	10114-4
• Overlay Panel German	10114-5
• Overlay Panel French	10114-6
• Overlay Panel Italian	10114-7
• Overlay Panel Portuguese	10114-8
LTV® 1000 (with I/E Hold):	
• Switch, Membrane Panel	10641-1
• Overlay Panel English	11406-2
• Overlay Panel Japanese	11406-3
• Overlay Panel Spanish	11406-4
• Overlay Panel German	11406-5
• Overlay Panel French	11406-6
• Overlay Panel Italian	11406-7
• Overlay Panel Portuguese	11406-8
• Pad, Memory PCBA Secure	10597
• Pad, Motor PCBA Thermo Conductive	11441
• Pad, Turbine Thermo Conductive	10129
• PCBA, Analog	10136
• PCBA, Analog	10643
• PCBA, Analog	11803
• PCBA, Main	10133
• PCBA, Motor	10135
• PCBA, Power	15000
• PCBA, Programmed Memory	10137
• Screw, 1 3/4" Pan-head	10434
• Screw, 1 7/8" Black colored Pan-head	10918B
• Screw, 1/4" Flat-head	10430
• Screw, 1/4" Pan-head	10435
• Screw, 3/16" Pan-head	14372

Replacement Part Name	Part Number
• Screw, 3/4" Pan-head	10500
• Screw, 3/8" Flat-head	10474
• Screw, 1/4" Green colored Pan-head	10435G
• Screw, 5/8" Flat-head	10499
• Screw, 5/8" Yellow colored Pan-head	10437Y
• Screw, 7/16" Pan-head	10433
• Screw, 7/8" Red colored Pan-head	10607R
• Screw, 1/8" Flat-head	14498
• Seal, O_2 Donut	10603
• Seal, Side	10881
• Soft Side, Left	10105
• Soft Side, Right	10106
• Solenoid Manifold Assembly	10710
• Solenoid Manifold Assembly	14125
• Spacer, Manifold to Back Panel	11521
• Spring, Knob	10443
• Standoff, 3/16" Hex	11543
• Switch, Rotary (with hex nut)	11190
• Tape, Kapton	11321
• Tie, Cable	10466
• Turbine Manifold Assembly	11490
• Washer, Rotary Switch Assembly	11644
• Washer, Finish	10191
• Wrap, Spiral	10919

Settings, Dip Switch

The following Dip Switch Settings table provides Dip Switch factory set default information.

Dip Switch No.	Function	Default Setting
1	Force all LEDs to turn on. Use in conjunction with dip switch #5.	OFF
2	**Intended for factory use only** Force O_2 pressure to 50 psi regardless of inlet pressure.	OFF
3	**Intended for factory use only** Disallow dimming when on battery and no Front Panel activity after 60 seconds.	OFF
4	**Intended for factory use only**	OFF
5	OFF = Normal operation. ON = Maintenance mode (for calibration)	OFF
6	**Intended for factory use only** RTC clock battery connection.	ON
7	**Intended for factory use only** ON = Flash write enabled.	OFF
8	**Intended for factory use only** ON = Flash write protect.	ON

Settings, Front Panel Controls and Extended Features

The following tables provide factory default information.

Front Panel Controls

Control	Default
Breath Rate	12 bpm
Tidal Volume	500 ml
Pressure Control[140]	1 cmH_2O
Inspiratory Time	1.5 sec
Pressure Support[141]	1 cmH_2O
$\%O_2$[142]	21
Sensitivity	2 lpm (LTV® 1000, 950 & 900) 3 cmH_2O (LTV® 800)

Control	Default
High Pres Limit	20 cmH_2O
Low Pres	5 cmH_2O
Low Minute Volume[141]	2.5 lpm
Volume / Pressure Mode[140]	Volume
Ventilation Mode	Assist / Cont
Low Pres O_2 Source[142]	Off
Control Lock	On

Extended Features

Feature	Default
Alarm Volume	85 dBA
Apnea Interval	20 sec
HP Alarm Delay	No Delay
LPP Alarm	All Breaths
Rise Time Profile[141]	4
Var. Flow Term[141]	25%
Var. Time Term[141]	3 sec
PC Flow Term[140]	Off

Feature	Default
Leak Compensation[141]	Off
NPPV Mode	Off
Control Unlock	Easy
Language	English
Com Setting	Monitor (LTV® 1000, 950 & 90 Data (LTV® 800)
Date Format	mm/dd/yy
PIP LED	On[143]

[140] Applicable to LTV® 1000, and 950 only
[141] Not applicable to LTV® 800
[142] Applicable to LTV® 1000 only
[143] In versions of the LTV® software before 00.01.28, the default for the PIP LED was "Off".

Tools, Required

General Tools:

The following general tools are required to perform various procedures on the LTV® Series Ventilator;

- Air supply, (0-50 cmH_2O)
- Allen wrench, 7/64"
- Amp meter, 10 amp to 60 Hz
- Cleaning brush, soft
- Compressed O2 source (with 0-60 PSI regulator)
- Compressed gas source (with 0-50 cmH_2O regulator)
- Dental pick
- Drill Bit, 3/16"
- Drill Motor, electrical
- Dykes (or cutters), small
- Multi-Meter, Digital
- Nut drivers, 3/16", 1/4", 1/2" & 13mm adapters for torque wrench
- O2 Analyzer (calibrated)
- O2 Inlet connector
- O2 Supply (0-50 PSIG)
- Pliers, needle nose
- Pop Rivet tool[144]
- Pressure gauge (FSD >50 PSI)
- Pressure manometer (0-100 cmH_2O)
- Scissors
- Screwdriver, Phillips / cross-tip with torque meter
- Screwdriver, Straight tip
- Spirometer (calibrated)
- Test Lung (or other large-compliance reservoir)
- Test Lung (1 liter or greater)
- Tie wrap tool
- Variable DC voltage source
- Wrist strap, grounded anti-static

Unique Tools:

The following unique tools are required to perform various procedures on the LTV® Series Ventilator and are available from Pulmonetic Systems separately, or as part of the **Maintenance and Calibration Kit, P/N 11566;**

• Calibration Syringe Assembly	P/N 11471
• Driver, Torque Dial Indicator	P/N 11574
• External Battery Test Cable Assembly	P/N 11474
• Flow Valve Insertion Tool	P/N 14206
• Fuse Removal Tool	P/N 14316
• Internal Battery Test Cable Assembly	P/N 11472
• Lubricant, Silicone Compound	P/N 10123[145]
• Patient Assist Cable, Normally Closed	P/N 10779
• Patient Assist Cable, Normally Open	P/N 10780
• Power PCB Removal Tool	P/N 11599
• Service Cable Assembly	P/N 11485
• Stepper Motor Calibrator	P/N 10871
• Turbine Pressure Test Adapter Assembly	P/N 11567

---

[144] Pop Rivet tool capable of setting .114" diameter shaft. Pop Rivets.

[145] In the European Union, Loctite® 8104 may be substituted as an equivalent compound.

Transducer Calibration, Acceptable A/D Counts

Airway Pressure (AP)

@ 50 cmH_2O	733 – 1570
Ambient	10 – 400

Flow Differential Bi-Directional (FDb)

@ -30 cmH_2O	64-3240
Ambient	3180-4045

Flow Differential Wide (FDw)

@ 30 cmH_2O	854 – 4030
Ambient	10 – 400

Flow Differential Narrow (FDn)

80 +/- 70	10 - 150
Ambient	128-3968
4015 +/- 70	3945 - 4085
Ambient	128-3968

Flow Valve Differential (FVd)

@ 15 cmH_2O	1925 – 2340
Ambient	40 – 328

Oxygen Pressure (O_2) - *LTV® 1000 only*

@ 50 PSI	900 – 1822
Ambient	122 – 246

Torque Values

The following Torque Values Table provides torque values used in the assembly of the LTV® Series Ventilator.

Assy./Part to be Torqued	In-oz[146] (Nm[147]) Torque Value	Ref. Page
• Analog Board mounting screws (2)	60 in-oz (0.42 Nm)	8-40 & 8-83
• Back Panel side mounting screws (6)	20 in-oz (0.14 Nm)	8-30
• Back Panel top mounting screws (3)	60 in-oz (0.42 Nm)	8-30
• Battery Cover screws (6)	60 in-oz (0.42 Nm)	8-57
• Battery Cache PCBA	60 in-oz (0.42 Nm)	8-36
• Fan Assembly mounting screws (2)	40 in-oz (0.28 Nm)	8-43
• Flow Valve Assembly mounting screws (2)	60 in-oz (0.42 Nm)	8-48
• LTM/LTV® Mounting Bracket (5)	60 in-oz (0.42 Nm)	8-22
• LTM/LTV® Mounting Block (3)	60 in-oz (0.42 Nm)	8-22
• Main Board mounting screws (3)	60 in-oz (0.42 Nm)	8-61
• Manifold to Back Panel Spacer (4)	20 in-oz (0.14 Nm)	8-28
• Motor Board mounting screws (4)	60 in-oz (0.42 Nm)	8-65 & 8-8
• Oxygen Blender mounting screws (4)	60 in-oz (0.42 Nm)	8-70 & 8-9
• Power Board mounting screws (except Solenoid Manifold screws) (6)	60 in-oz (0.42 Nm)	8-78
• Protective Boot, Upper - Leg mounting screws (2)	60 in-oz (0.42 Nm)	8-10
• Protective Boot, Upper – Side mounting screws (2)	20 in-oz (0.14 Nm)	8-10
• Protective Boot, Lower – Side mounting screws (4)	20 in-oz (0.14 Nm)	8-12
• Rotary Switch Assy. Mounting nut (1)	40 in-oz (0.28 Nm)	8-89
• Soft Side Panel (right or left) mounting screws (10)	20 in-oz (0.14 Nm)	8-87
• Solenoid Manifold mounting screws (1 or 2) or nut (1)	20 in-oz (0.14 Nm)	8-78, 8-80 & 8-92
• Sounder Bracket mounting screw (1)	60 in-oz (0.42 Nm)	8-37
• Turbine Manifold mounting screws (4)	20 in-oz (0.14 Nm)	8-70 & 8-9

[146] Inch ounces. A measurement of torque.
[147] Newton meters. A measurement of torque equivalent to 0.007062 inch ounces.

Appendix F - INDEX

2

24 Hr Burn-in
Worksheet 9-31

3

3-Wire Connector 8-49

4

4-Wire Connector 8-49

A

A/D Counts E-14
AD MMTCH, AD MTCH1, Definition. D-7
Airway Pressure (AP) E-14
Airway Pressure Calibration 6-7
AIRWAY, Displayed 6-7
Alarm Sounder 8-35, 8-53
Alarm Test, Troubleshooting 7-37
ALARM VOL 7-37
ALARM, Displayed 2-4
Alarm, Test 9-2
Alarms
DEFAULTS 7-36
DISC/SENSE 7-32
HIGH PRES 7-31
HW FAULT 7-34, 7-35
NO CAL 7-35
NO CAL DATA 7-35
REMOVE PTNT 6-5
RESET 7-35
XDCR FAULT 7-33
Alarms, Troubleshooting 7-31
Analog Board 8-38, 8-39, 8-40
Analog Board Setting 6-36
Anti-Static Precautions 8-63
Assistance, Getting 1-1, 8-2
Autocycling 7-6, 7-10, 7-19, 7-32

B

Back Panel 8-3, 8-23
Barbed Elbow 8-71
Battery Checkout
Worksheet ..... *See Power Checkout Worksheet*
Battery Pack, Internal 8-55
Blender ..... *See Oxygen Blender*
Blender Filter *See Oxygen Blender Filter*
Block Diagram ..... *See Schematic*
Boots, Protective 8-4
Breath Rate, Test 9-15
Button Panel ..... *See Front Panel*
Bypass Tubing 8-71

C

CAL FAIL 6-8, 6-15, 6-17, 6-19
Calibration 6-6
Airway Pressure 6-7
Clearing ..... *See Clear, Calibration*
Flow Differential 6-9
Flow Valve 6-22
Motor Drive 6-18
O_2 Inlet Pressure 6-16
Valve Differential 6-13
Worksheet 6-21, 6-26
Cautions 1-5, 1-6

Cautions, Definition 1-2
Cleaning 4-1
  Exhalation Valve 4-2
  External Inlet Filter 4-7
  Fan Filter 4-8, 8-44
  Internal Inlet Filter 8-58
  Oxygen Blender Filter 8-72
Clear
  Calibration 6-39
  Control Settings 6-39
  EEPROM 6-39
  Events 6-39
Clear Tube 8-30, 8-50
CLEAR, Menu 6-39
Component Removal 8-1
Component Replacement 8-1
Contact Information 1-1, 8-2
Control Knob 8-88
Control Limiting 7-3
Control Panel ..... *See Front Panel*
Control Settings, Clearing ..... *See Clear, Control Settings*
Control Test, Troubleshooting 7-38
Control, Test 9-2
CTRL UNLOCK 7-4, 7-5

D

Defaults E-12
DEFAULTS Alarm, Troubleshooting 7-36
Delrin Poppet 6-22
Diagnostic Procedures, Advanced FiO_2 7-26
Diagnostic Procedures, Advanced Vte 7-22
Dim Displays 7-4
Dip Switch 5 ..... 6-5, 6-20, 8-49, 8-50
Dip Switch Settings E-11
DISC/SENSE Alarm, Troubleshooting. 7-32
DISPLAY 2-5
Display Select A-1
Display Test, Troubleshooting 7-38
Display, Test 8-54, 9-2
Displays
  Dim or Blank 7-4
Dovetail Mounting Bracket 8-24

E

EASY 7-5
EEPROM, Clearing *See Clear, EEPROM*
EMC ii
ESD 7-31, 7-35, 7-36
ET Tube 7-41
Event Codes D-3
Event Trace D-1
Events, Clearing ..... *See Clear, Events*
Exhalation Valve 4-2
  Cleaning 4-2
  Retainer Collar 4-2
  Sterilizing 4-2
EXP HOLD A-1
Expiratory Hold A-1
Extended Features Map E-2
External Accessories Screws Location E-4
External Inlet Filter ... *See Filter: External Inlet*

F

Fan Assembly 8-42
Fan Connector 8-53
Fan Filter. 4-8, 8-42, 8-44. *See also: Fan Assembly*
Filter
  External Inlet 4-7, 8-44
  Fan 4-8, 8-42
  Internal Inlet 8-58
  O_2 Inlet 8-72
Final Checkout Test
  24 Hr Burn-in 9-30
  General 9-2
  Oxygen 9-27
  Performance 9-15
  Power 9-11
Final Checkout Test Matrix 9-1

FLOW DIFF 6-9
Flow Differential Bi Directional (FDb) E-14
Flow Differential Calibration 6-9
Flow Differential Narrow (FDn) E-14
Flow Differential Wide (FDw) E-14
FLOW TERM 7-2
Flow Valve
4 wire connector 8-83
Assembly 8-45
Calibration 6-22
Connector 8-52, 8-53
Current Configuration 8-48
Original Configuration 8-48
Tubing 8-50
VHome setting 6-35
FLOW VALVE 6-34
Flow Valve Differential (FVd) E-14
Forms
Service Record C-1
Front Panel 8-52

G

General Checkout
Worksheet 9-7

H

HARD 7-5
Heatsink Pads.. *See Thermo Conductive Pads*
Help 1-1, 8-2
HIGH O2 PRES 7-3
HIGH PRES 7-2
HIGH PRES Alarm, Troubleshooting... 7-31
HOME ER1, Definition D-7
HP DELAY 7-31
HW FAULT 4-8, 7-21, 7-33, 8-44
HW FAULT Alarm, Troubleshooting 7-34, 7-35

I

Input O_2 Flow Chart E-6
INSP HOLD A-1
Inspiratory Hold A-1
Inspiratory/Expiratory A-1
Internal Battery 8-55
Internal Inlet Filter ..... *See Filter: Internal Inlet*
Internal Tube Routing Configurations .. 8-31

J

JP8, Connector 8-48

K

Kapton Tape 8-91
Keypad Ribbon Cable 8-60

L

LEAK 2-9
Leak Test, Troubleshooting 7-38
Leak, Test 9-2
LOCKED 7-4
LOW MIN VOL 7-3
LOW O2 PRES 7-3
LOW PRES 7-2
LTM Compatibility Test 9-20
LTM Graphic Monitor 6-36
LTM/LTV® Mounting Bracket 8-16

M

Main Board 8-59
Maintenance 6-4
10,000 Hour/2 Year 5-4
30,000 Hour 5-4
750 Hour/Monthly 5-3
Before Connecting to a Patient 5-2
Before Initial Use 5-2
Calibration 6-4
Daily 5-3
Storage 5-2
Manifold Screw 8-96
Map, Extended Features E-2
Membrane Switch Panel 8-51, 8-52

Memory....6-39
Memory Board....8-63
MODEL....6-33, 7-3, 7-4
Model Selection....6-33
Motor Board....8-65
MOTOR DRIVE....6-19
Motor Drive Calibration....6-18
Mounting Bracket, LTM/LTV®....8-16

N

NO CAL Alarm, Troubleshooting....7-35
NO CAL DATA Alarm, Troubleshooting....7-35
Notes, Definition....1-2

O

O_2 Blender....*See Oxygen Blender*
O_2 Blender Filter....*See Oxygen Blender Filter*
O2 INLET....6-16
O_2 Inlet Filter *See Oxygen Blender Filter*
O_2 Inlet Pressure Calibration....6-16
O_2 Input Flow Chart....E-6
Opaque Orange Tube....8-50
Orange Seal....8-71, 8-99
Orange Tube....8-48
Overlay Panels....8-51
Oxygen Pressure O_2 *LTV® 1000 only*....*E-14*
Oxygen Blender....8-67
Oxygen Blender Filter....8-72
Oxygen Blender Mounting....8-70
Oxygen Checkout Worksheet....9-29
Oxygen Pressure Transducer....8-39

P

Parts, Replacement....E-7
PC FLOW TERM....7-2
PCBA, Analog....8-38
PCBA, Main....8-59
PCBA, Memory....8-63
PCBA, Motor....8-65
PCBA, Power....8-73
PEEP Test....9-17
Performance Checkout....9-15
Worksheet....9-22
Pisco Connector....8-38, 8-39
PM....*See Preventative Maintenance*
Pneumatic Schematic....*See Schematic*
Port, Solenoid Manifold #5....8-49
Power Board....8-73
Power Checkout Worksheet....9-13
Pressure Control Test....9-15
Preventative Maintenance....5-1
Protective Boots....8-4

R

Real Time Transducer Data....*See RT XDCR DATA*
Real-Time Transducer Test....9-18
Recalibration....8-64
Removal, Component....8-1
REMOVE PTNT....2-2
REMOVE PTNT, Alarm....6-5
Replacement Parts....E-7
Replacement, Component....8-1
RESET Alarm, Troubleshooting....7-35
Rotary Knob Assembly....8-88
Rotary Switch Connector....8-52, 8-53
Routing, Internal Tubes....8-31
RT XDCR DATA....3-1, 7-17, 7-20

S

Schematic
Pneumatic Block Diagram....6-1
Pneumatic Detail....6-3
Scrolling....B-4
Sensitivity Test....9-16

Service Records, Information 8-1, C-1
SERVO 6-27, 7-20, 9-19
Servo Test 6-27
Settings, Default..... E-12
Soft Side Panel 8-87
Software - Analog PCBA.....8-64
Software Compatibility 1-6, 8-63
SOLENOID 6-29
Solenoid Manifold 8-52, 8-54, 8-61, 8-83, 8-90, 8-92
Solenoid Test.....6-29
Solenoids.....9-19
Sounder
Assembly.....8-35, 8-52
Connector.....8-52, 8-53
Specifications..... A-1
Step Test 6-30
Sterilizing 4-1
Exhalation Valve.....4-2
External Inlet Filter.....4-7
Fan Filter 4-8, 8-44
Storage 5-2
Symbols.....1-7

T

Temperature Compensation.....6-35
Test
24 Hour Burn-in 9-30
Alarm..... 2-4, 5-2, 5-3, 9-2
Control..... 2-7, 5-2, 5-3, 9-2
Display 2-5, 5-2, 5-3, 9-2
General Checkout.....9-2
Leak 2-9, 5-2, 5-3, 9-2
LTM Compatibility.....9-20
Oxygen Checkout 9-27
PEEP 9-17
Performance Checkout..... 9-15
Power Checkout 9-11
Pressure Control 9-15
Real-Time Transducer.....9-18
Sensitivity 9-16
Servo.....6-27
Solenoid 6-29
Step.....6-30
Tidal Volume 9-15
Vent Inop Alarm..... 2-11, 5-2, 5-3, 9-2
Watchdog 6-31, 9-20
Thermistor Cable 6-24, 6-34, 6-35, 8-45, 8-48, 8-50
Thermo Conductive Motor Board Heatsink Pad 8-93
Thermo Conductive Pads.....8-93, 8-94
Tidal Volume Test 9-15
TIME TERM 7-2
Tools, General E-13
Tools, Required..... E-13
Tools, Unique..... E-13
Top Tube 8-49
Torque Values..... E-15
Troubleshooting 7-1
Troubleshooting, Advanced FiO_2.....7-26
Troubleshooting, Advanced Vte 7-22
Troubleshooting, Alarms 7-31
Troubleshooting, Checkout Test Failures 7-37
Troubleshooting, Displays and Buttons 7-2
Troubleshooting, Power and Battery Operation.....7-28
Troubleshooting, Test Lung Operation 7-41
Troubleshooting, Ventilator Performance 7-6
Tube Routing Configurations.....8-31
Turbine Manifold 8-69, 8-71, 8-95

U

Units Conversion..... E-1
Upper Weldment 8-52

V

VALVE DIFF 6-13
Valve Differential Calibration.....6-13
VENT CHECK.....2-3, 9-2
Vent Inop Alarm Test, Troubleshooting 7-39

Vent Inop Alarm, Test 9-2
VENT MTNCE..... 6-4
Ventilator Checkout .... *See VENT CHECK*
Ventilator Checkout Menu 8-54
Ventilator Checkout Test
Alarm..... 2-4, 2-5
Control..... 2-7
Leak 2-9
Vent Inop Alarm..... 2-11
Ventilator Checkout Tests 2-1
Vhome
Label 8-50
Setting..... 8-50
Value..... 8-48
VHome. 6-22, 6-34, 7-7, 7-9, 7-11, 7-12, 7-13, 7-18, 7-39

W

WAITING 2-9
Warnings..... 1-3, 1-4
Warnings, Definition..... 1-2
Warranty ii
Watchdog Test..... 9-20
WDOG 6-31
WDOG Test, Troubleshooting 7-40
Wire Fan Connector..... 8-52
Worksheets
24 Hr Burn-in 9-31
Battery Checkout ..... *See Power Checkout Worksheet*
Calibration 6-21, 6-26
General Checkout..... 9-7
Oxygen Checkout 9-29
Performance Checkout..... 9-22
Power Checkout 9-13

X

XDC FLT1, Definition D-7
XDCR FAULT7-6, 7-11, 7-13, 7-32, 7-39
XDCR FAULT Alarm, Troubleshooting 7-33
XDCR ZERO. 7-7, 7-9, 7-12, 7-14, 7-18, 7-19

Y

Yellow Flag 8-48

Z

ZIF Connector..... 8-52